rexroth
A Bosch Company

Screw assemblies

Ball screw assemblies BASA/Planetary screw assemblies PLSA

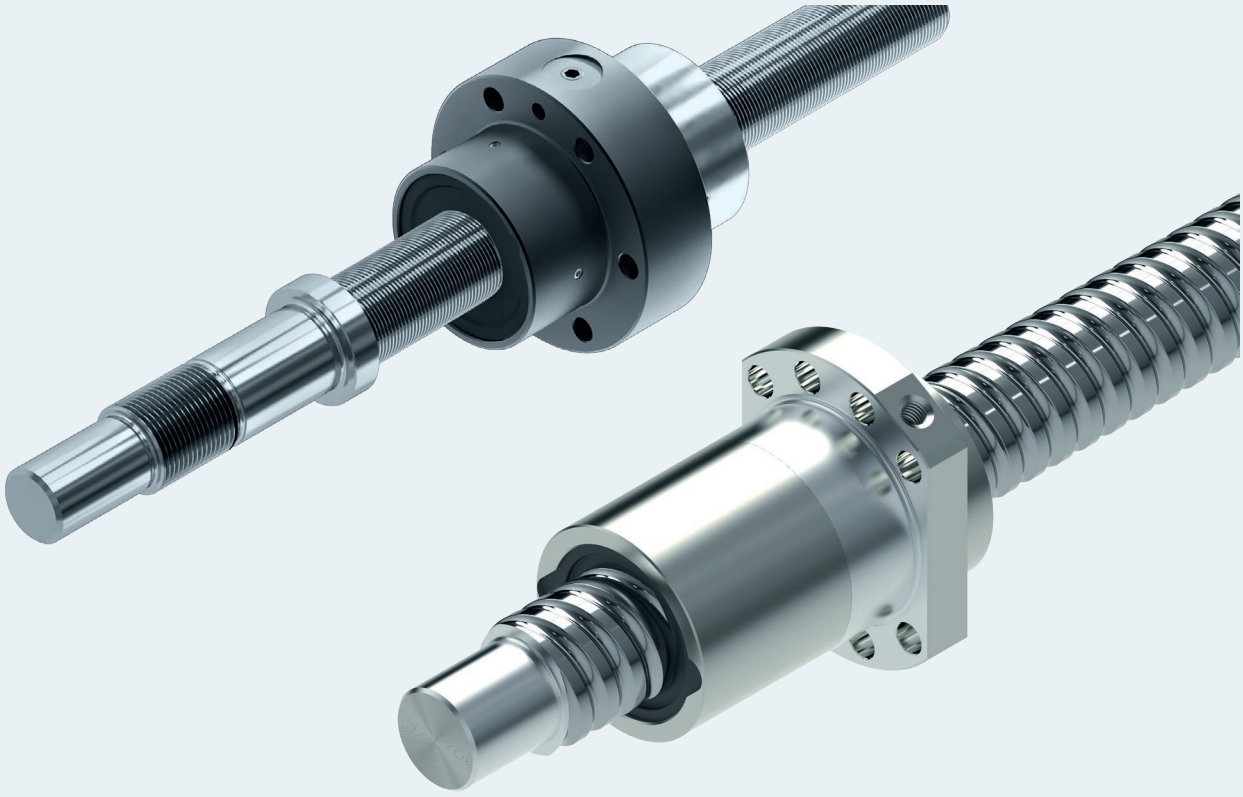

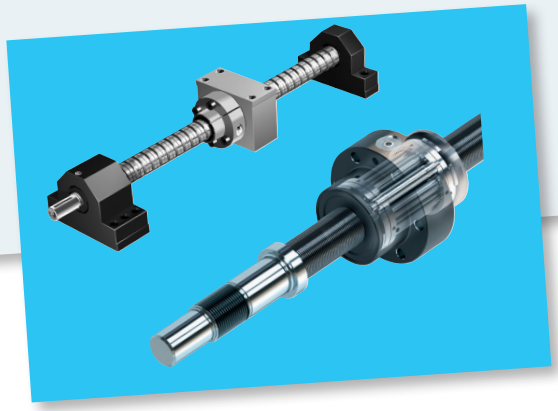

www.boschrexroth.com

Ball screw assemblies BASA

Ball screw assemblies are the efficient solution for the precise conversion of rotary to linear motion. Building on our many years of experience and extensive engineering expertise, we have developed a product range that fulfills the most diverse requirements. No matter whether you need very high linear speeds, maximum load ratings, or minimum installed length, you will always find the right solution in Rexroth's broad manufacturing spectrum. To make sure your application runs with the utmost accuracy and operational reliability, the individual components in our range have been precisely matched to one another, so complete assemblies can be put together efficiently.

More detailed information from page 7 onwards

Characteristic features

- **A really varied range,** suitable for virtually any requirements
- Absolutely **uniform** and **stable functioning**
- **Especially smooth operation** due to optimal ball pick-up and recirculation
- **High load rating** due to large number of balls
- **Short nut length**
- **Easy installation** of the nuts, mounting orientation individually specified
- **Adjustable** preloaded **single nuts**
- Extensive range comprising various series
- Matching supplementary individual components such as nut housings and end bearings, also as pillow block units, partly prepared for the installation of suitable motor flanges

Planetary screw assemblies PLSA

The planetary screw assembly PLSA is a complete cylindrical screw assembly with planets as the rolling elements. It serves to convert rotary motion into linear motion and vice versa. The basic functioning of a planetary screw assembly is easy to describe, but the range of designs and the requirements for practical applications are many and varied.
Planetary screw assemblies are designed to transmit high forces and thus round off the upper end of the screw assembly product portfolio.
Planetary screw assemblies are screw assemblies in which threaded rollers (the planets) are housed in a threaded nut, their ends being lodged in discs with holes arranged around a pitch circle so that they rotate axially parallel to the special threaded screw, causing the nut to move linearly along the screw.

More detailed information from page 193 onwards

Characteristic features

- **Smooth functioning** due to the principle of synchronized planets
- Very **quiet operation**
- Long **service life**
- **Compact** design
- High **power density**
- **Pre-tensioned** units available
- High **positioning accuracy** and **repeatability**
- **Low** lubricant consumption

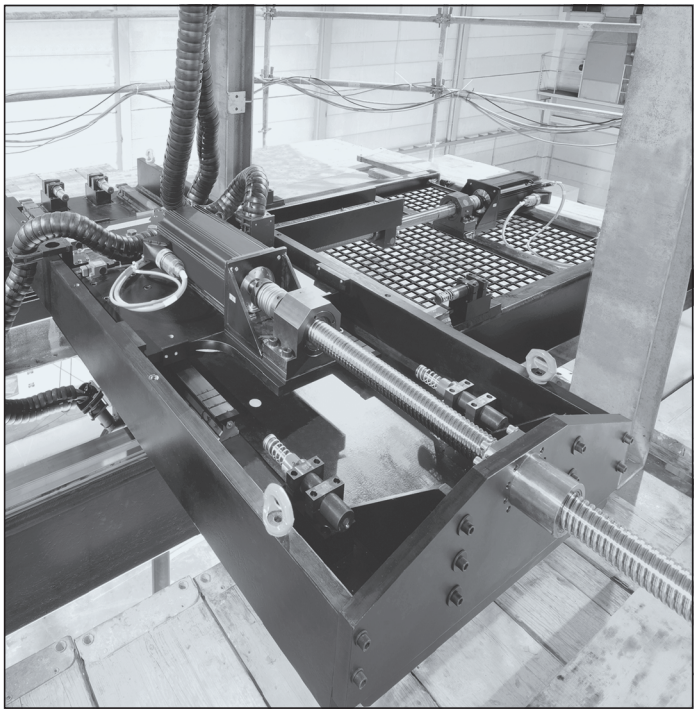

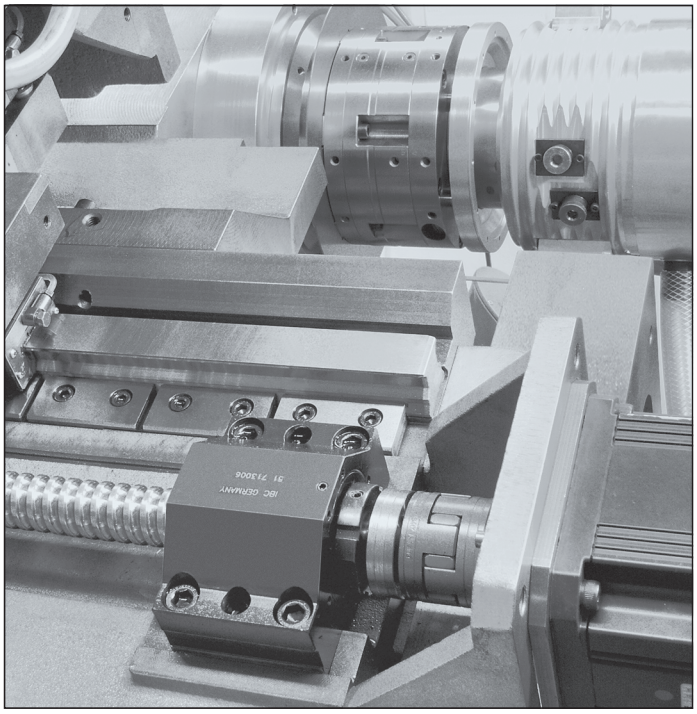

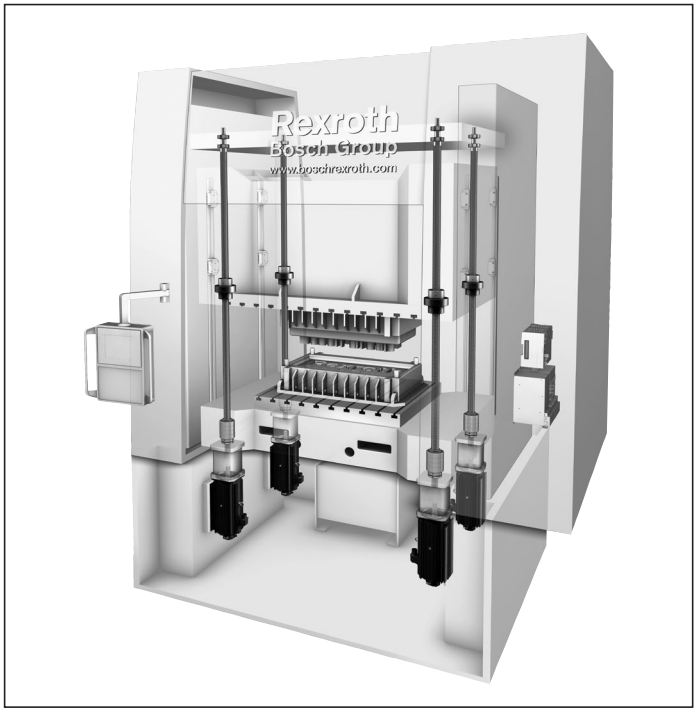
Rexroth
Bosch Group
www.boschrexroth.com

Notes

General notes

- Non-horizontal installation
  There is no self-locking effect due to the low level of friction between the screw and the nut.
  The components of the product are designed to last for the product's service life; a major defect may nonetheless arise in exceptional cases, and if the moving part (i.e. the screw assembly nut) is not installed horizontally it may fall off. An additional protection against falling loads is therefore required for non-horizontal installation.

Intended use

- Rexroth screw assemblies are components that are used to convert a rotary motion into a linear motion, and vice versa. Rexroth screw assemblies are intended exclusively for use in machines for moving and positioning.
- The product is intended exclusively for professional use and not for private use.
- Use for the intended purpose also includes the requirement that users must have read and understood the related documentation completely, in particular the “Safety Instructions.”

Misuse

Use of the product in any other way than as described under “Intended use” is considered to be misuse and is therefore not permitted. If unsuitable products are installed or used in safety-relevant applications, this may lead to uncontrolled operating statuses in the application which can cause personal injury and/or damage to property.
The product may only be used in safety-relevant applications if this use has been expressly specified and permitted in the product documentation.
Bosch Rexroth AG will not accept any liability for injury or damage caused by misuse of the product. The risks associated with any misuse of the product shall be borne by the user alone.
Misuse of the product includes:

- transporting people

General safety instructions

- The safety rules and regulations of the country in which the product is used must be complied with.
- All current and applicable accident prevention and environmental regulations must be adhered to.
- The product may only be used when it is in technically perfect condition.
- The technical data and environmental conditions stated in the product documentation must be complied with.
- The product must not be put into service until it has been verified that the final product (for example a machine or system) into which the product has been installed complies with the country-specific requirements, safety regulations and standards for the application.
- Rexroth screw assemblies may not be used in zones with potentially explosive atmospheres as defined in the ATEX directive 94/9/EC.
- Rexroth screw assemblies must never be altered or modified. The user may only perform the work described in the "Quick user guide" or the "Mounting instructions for screw assemblies."
- The product must never be disassembled.
- At high travel speeds a certain amount of noise is caused by the product. If necessary, appropriate measures should be taken to protect hearing.
- Special safety requirements for specific sectors (e.g. cranes, theaters, foodstuffs) as provided for in laws, directives and standards must be complied with.
- The following standards must be complied with: ISO 3408 and DIN 69051.

Directives and standards

Rexroth screw assemblies are suitable for dynamic linear applications that are moved and positioned reliably and precisely. The machine tool industry and other sectors must observe a series of standards and directives. These requirements can vary significantly worldwide. It is therefore essential to understand the legislation and standards that apply in each particular region.

DIN EN ISO 12100

This standard is entitled Safety of machinery – General principles for design – Risk assessment and risk reduction. It gives a general overview and contains a guide to the major developments governing machines and their intended use.

Directive 2006/42/EC

This European Machinery Directive describes the basic health and safety requirements
for the design and manufacture of machinery. The manufacturer of a machine or his authorized representative has a duty to ensure that a risk assessment has been performed in order to determine the health and safety requirements which have to be fulfilled for that machine. The machine must be designed and built with the results of the risk assessment in mind.

Directive 2001/95/EC

This directive covers general safety requirements for any product placed on the market and intended for consumers, or likely to be used by consumers under reasonably foreseeable conditions, including products that are made available to consumers in the context of service provision for use by them.

Directive 1999/34/EC

This directive concerns liability for defective products and applies to industrially manufactured movables, irrespective of whether they have been incorporated into another movable or into an immovable or not.

REGULATION (EC) No. 1907/2006 (REACH)

This regulation relates to restrictions on the marketing and use of certain dangerous substances and preparations. “Substances” means chemical elements and their compounds as they occur in the natural state or as produced by industry. “Preparations” are mixtures, compounds or solutions consisting of two or more substances.

Ball screw assemblies BASA

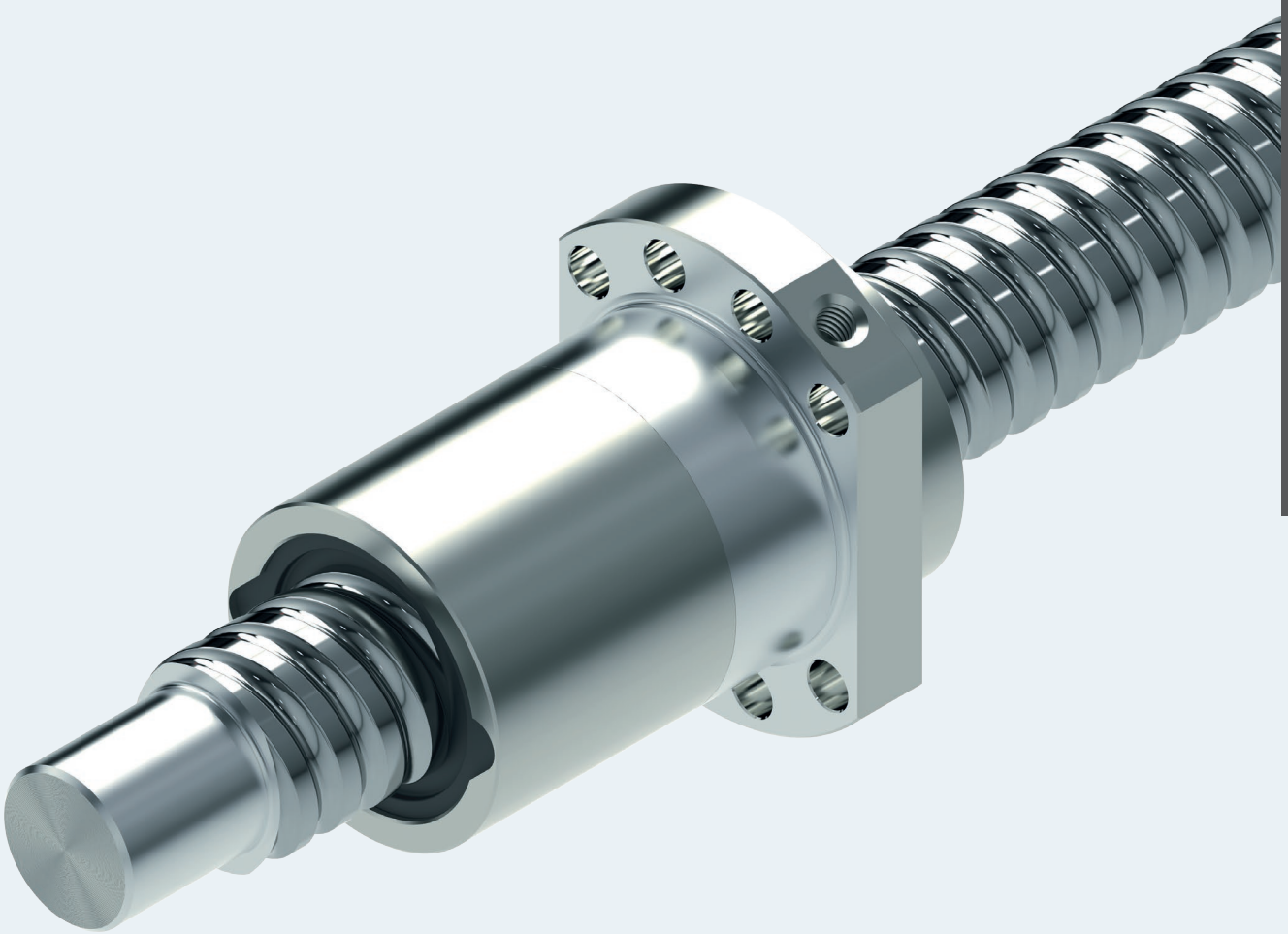

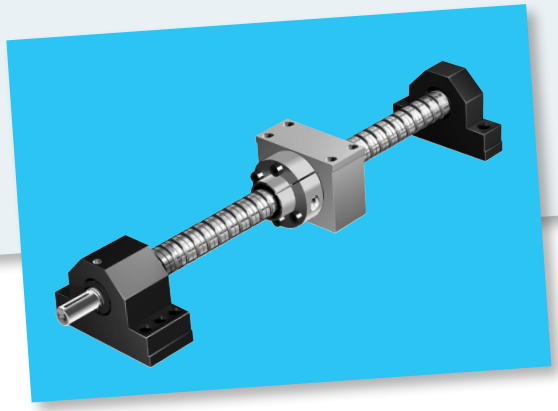

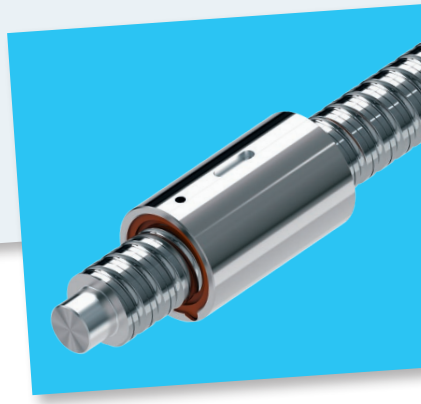

R999001185/2021-04, **Bosch Rexroth AG**

New features at a glance

Discontinuation of 4 nut types
In the standard series, single nuts with flange with recirculation cap FSZ-E-S and FSZ-E-B have been discontinued,

▲ **FSZ-E-S**

▲ **FSZ-E-B**

Introduction of the B flange
The C flange in the series FEM-E-C and FDM-E-C is replaced by the B flange. The nuts of the new design are available now under the designation FEM-E-B and FDM-E-B. All technical data remain unchanged. This change is necessary as the market and DIN favor the B flange.

▲ **FEM-E-B**

▲ **FDM-E-B**

Series expansion
To complete our product portfolio, for size 8, lead 5 has been reissued. For this new lead, single nuts with flange FEM-E-B and cylindrical single nuts ZEM-E-S are available. Size 40 has also been expanded with lead 25 and 30 as well as size 50 with lead 30. These leads have been brought out especially for the machine tool. These are available for the nut types single nut FEM-E-B and single nut with flange FED-E-B. Another new series is the size 80 x 40, which was created for the single flange nut FEM-E-B.

Introduction of the ID number for the screw drive
By the middle of the year, the ID number for the entire screw drive range (BASA and PLSA) was introduced. The ID number (R0404.....) is a serial number, which is already generated in the quotation phase and not only during order processing. This way, the material number of the requested screw drive is already provided to clients with their quotation.

Extension of relubrication intervals of grease lubrication
The latest assessments in testing by Bosch Rexroth verify that under specific operating conditions, the relubrication intervals of grease lubrication can be considerably extended.
At low loads, normal ambient temperatures and medium to high linear travel speeds or rotary speeds, 200 million revolutions can be realized at ball screw assemblies without relubrication.
This considerable increase was enables by continuous improvements in the production quality of spindles and nuts leading to better surfaces and higher accuracy in the geometrical dimensions of the track.

Table of contents: Ball screw assemblies

New features at a glance **8**

Table of contents **9**

Product overview **10**
Nuts and Nut Housings 10
Screws 12
Bearing 14
Accessories 15
Definition of ball screw assembly 16
Ball screw assemblies for all applications 18

Sample applications **19**

Inquiries and orders **20**

Nuts, miniature series **24**
Overview of formats 24
Single nut with flange FEM-E-B 25
Single nut with flange FEM-E-S 26
Adjustable-preload single nut SEM-E-S 27
Cylindrical single nut ZEM-E-S/ZEM-E-K 28
Screw-in nut ZEV-E-S 29

Nuts, Speed Series **30**
Single nut with flange with recirculation caps FEP-E-S 31

Nuts, standard series **32**
Overview of formats 33
Single nut with flange FEM-E-S 34
Single nut with flange FEM-E-B 36
Adjustable-preload single nut SEM-E-S 38
Adjustable-preload single nut SEM-E-C 40
Cylindrical single nut ZEM-E-S / ZEM-E-K / ZEM-E-A 42
Screw-in nut ZEV-E-S 44
Double nut with flange FDM-E-S 46
Double nut with flange FDM-E-B 48

Nuts, high-performance series **50**
Nuts, high-performance series 50
Single nut with flange FED-E-B 52
Driven single nut with flange FAR-B-S 54

Screws **56**

Screw ends **58**
Abbreviations 59

Accessories **92**
Overview 92
Nut housing MGS 94
Nut housing MGD 96
Nut housing MGA 98
Pillow block unit SEC-F assembly, aluminum 100
Pillow block unit SEC-L assembly, aluminum 102
Pillow block unit SES-F assembly, steel 104
Pillow block unit SES-L assembly, steel 106
Pillow block unit SEB-F assembly 108
Pillow block unit SEB-L assembly 110
Flange bearing assembly SEE-F-Z 112
Bearing assembly LAF 114
Bearing assembly LAN 116
Bearing assembly LAD 118
Bearing assembly LAL 120
Bearing assembly LAS 122
Slotted Nuts NMA, NMZ and NMG for fixed bearings 124
Assembly tool for slotted nut 125
Ring nut GWR 125
Ball screw assembly with front lube unit 126
Measuring pads 131
Arrestor nut 131

Technical data **132**
Technical notes 132
Acceptance Conditions and Tolerance Grades 134
Preload and rigidity 138
Frictional torques of the seals 144

Installation **146**

Lubrication **149**
Grease lubrication 150
Grease lubrication 156
Oil lubrication 162
Lubricants 168

Calculation and examples **170**
Calculation 170
Critical speed n_{cr} 174
Permissible axial load on screw F_c (buckling load) 175
Design of drive unit FAR-B-S 176

End Bearings **184**
Design notes, installation 184
Mounting the housing 185
Lubrication of the end bearings 186
Calculation 187

Design Calculation Service Form **189**

Nuts and Nut Housings

Nuts

Miniature series

FEM-E-B / FEM-E-S / SEM-E-S / ZEM-E-S / ZEM-E-K / ZEV-E-S

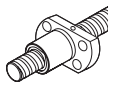

Speed series

Single nut with flange with recirculation caps FEP-E-S

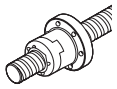

Series	Miniature					Page
Size d_0 x P x D_w	FEM-E-B	FEM-E-S	SEM-E-S	ZEM-E-S ZEM-E-K	ZEV-E-S	
6 x 1 x 0.8						from 25
6 x 2 x 0.8						
8 x 1 x 0.8						
8 x 2 x 1.2						
8 x 2.5 x 1.588						
8 x 5 x 1.588						31
12 x 2 x 1.2						
12 x 5 x 2						
12 x 10 x 2						

Standard series

Single nut with flange FEM-E-S

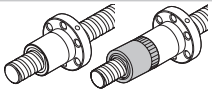

Single nut with flange DIN 69 051, Part 5 FEM-E-B

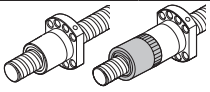

Adjustable-preload single nut SEM-E-S

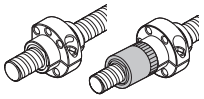

Adjustable-preload single nut DIN 69051, Part 5 SEM-E-C

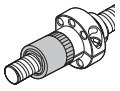

Cylindrical single nut ZEM-E-S/ZEM-E-K/ ZEM-E-A

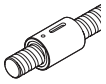

Screw-in nut ZEV-E-S

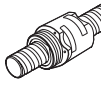

Double nut with flange FDM-E-S

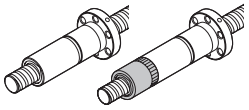

Double nut with flange DIN 69 051, Part 5 FDM-E-B

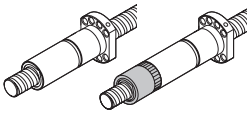

Series	Speed											High-performance		Page
Size d_0 x P x D_w	FEP-E-S	FEM-E-S	FEM-E-B	SEM-E-S	SEM-E-C	ZEM-E-S	ZEM-E-K	ZEM-E-A	ZEV-E-S	FDM-E-S	FDM-E-D	FED-E-B	FAR-B-S	
16 x 5 x 3		L	L	L		L								from 34
16 x 10 x 3														
16 x 16 x 3														
20 x 5 x 3		L	L	L		L	L							
20 x 10 x 3														
20 x 20 x 3.5														
20 x 40 x 3.5														36
25 x 5 x 3		L	L	L		L								
25 x 10 x 3														
25 x 25 x 3.5														
32 x 5 x 3.5		L	L	L		L								
32 x 10 x 3.969														38
32 x 20 x 3.969														
32 x 32 x 3.969														
32 x 64 x 3.969														
40 x 5 x 3.5		L	L	L		L								
40 x 10 x 6		L	L	L		L								40
40 x 12 x 6														
40 x 16 x 6														
40 x 20 x 6														
40 x 25 x 6														
40 x 30 x 6														
40 x 40 x 6														42
50 x 5 x 3.5														
50 x 10 x 6														
50 x 12 x 6														
50 x 16 x 6														
50 x 20 x 6.5														
50 x 25 x 6.5														44
50 x 30 x 6.5														
50 x 40 x 6.5														
63 x 10 x 6														
63 x 20 x 6.5														
63 x 40 x 6.5														
80 x 10 x 6.5														46
80 x 20 x 12.7														
80 x 40 x 12.7														

Standard range, right-hand lead

L Left-hand lead readily available

High-performance series		Page
Single nut with flange **DIN 69051, Part 5** **FED-E-B** 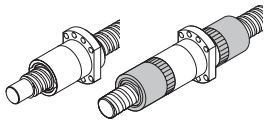		52
Driven single nut with flange **FAR-B-S** 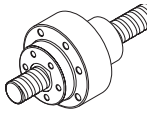		54

Nut housing		Page
MGS **for standard series** **FEP-E-S** **FEM-E-S** **SEM-E-S** **FDM-E-S** 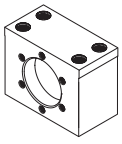		94
MGD **for standard series** **FEM-E-B** **SEM-E-C** **FDM-E-B** **FED-E-B** 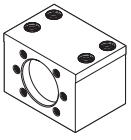		96
MGA **for cylindrical single nut** **ZEM-E-S** **ZEM-E-K** **ZEM-E-A** 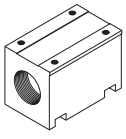		98

Lead P

Diameter d_0	5			10			12		16		20			25		30		32			40			64
16	A	B		A	B				A	B														
20	A	B	C	A	B	C					A	B	C								A			
25	A	B		A	B									A	B									
32	A	B	C	A	B	C					A	B	C					A	B	C				A
40	A	B	C	A	B	C		B		B	A	B	C		B		B				A	B	C	
50	A	B		A	B			B	A	B	A	B					B				A	B		
63				A	B							B										B		
80				A	B							B										B		

A = MGS
B = MGD
C = MGA

Screws

Precision screw BAS		Page
Tolerance grades: T5, T7, T9	**Sizes 6 to 12**	57
Tolerance grades: T5, T7, T9	**Left-hand lead** **Size**	
Screws in tolerance grade T3 (longer versions and larger sizes available on request)		

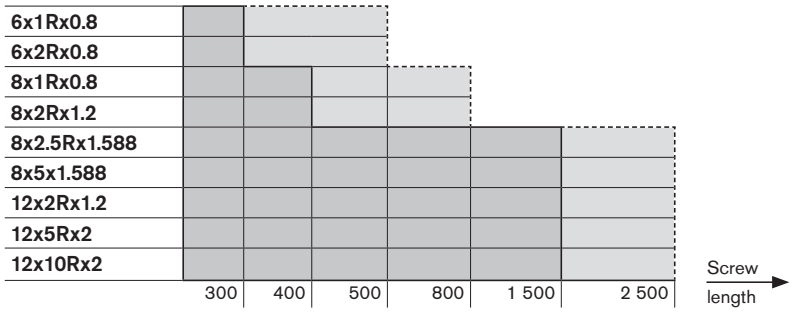

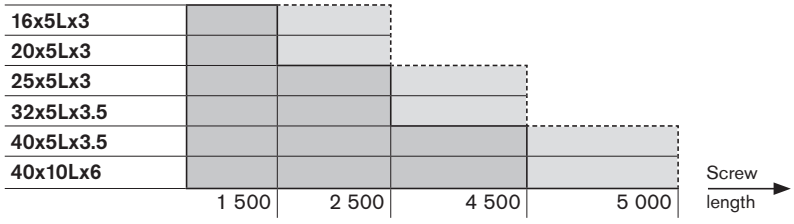

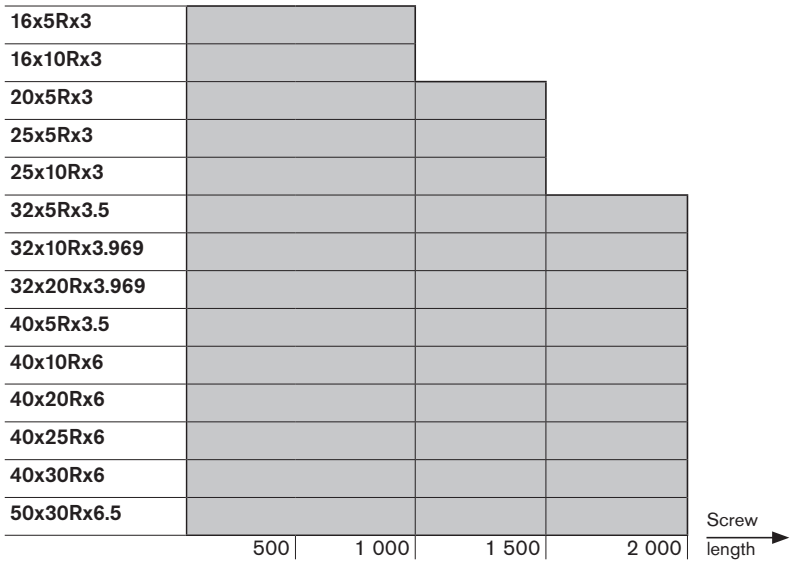

Precision screw BAS		Page
Tolerance grades: T5, T7, T9		57

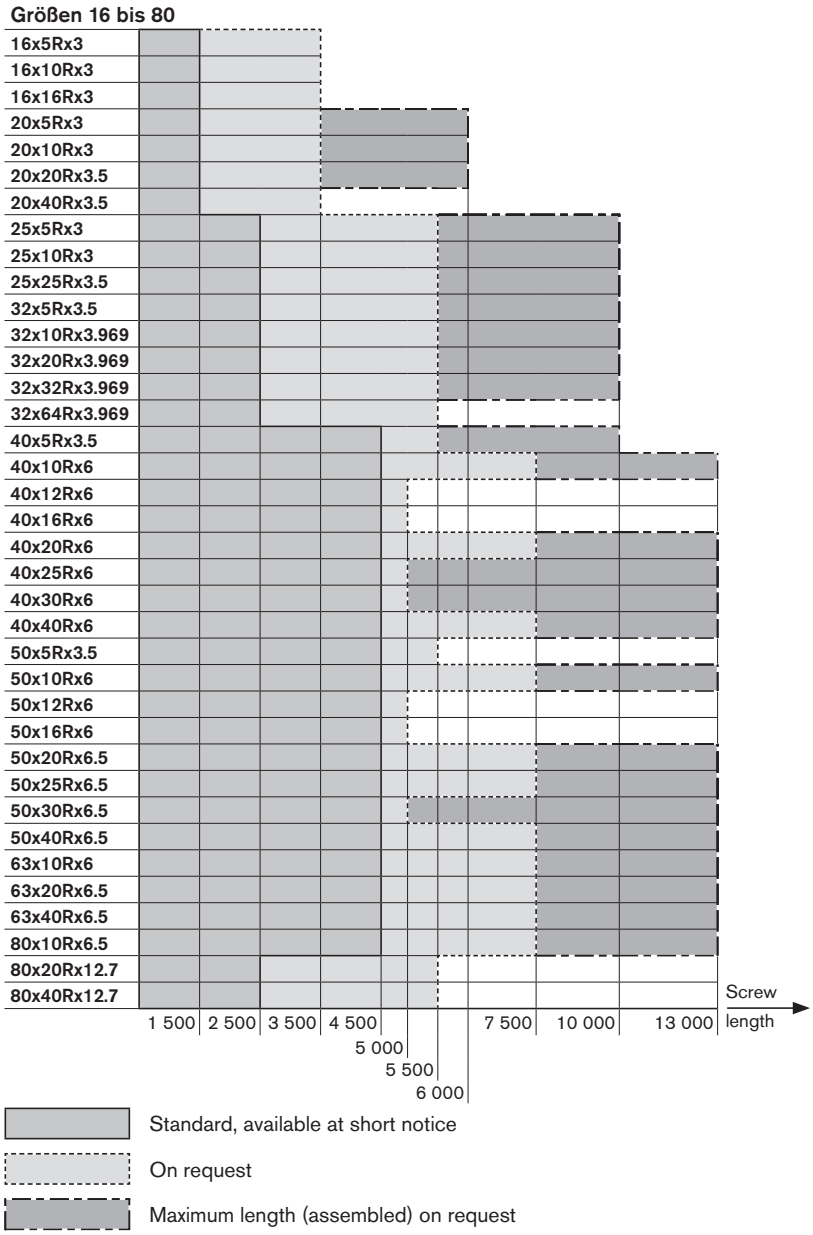

Screw ends		Page
		58

Bearing

Pillow block unit		Page
SEC-F	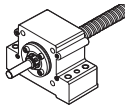	100
SEC-L	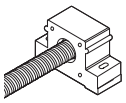	102
SES-F	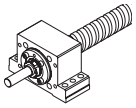	104
SES-L	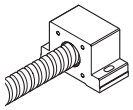	106
SEB-F	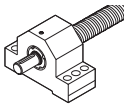	108
SEB-L	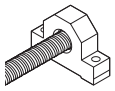	110
SEE-F-Z	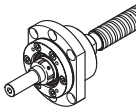	112

Lead P

Diameter d_0	1	2	2.5	5					10					12			16			20					25			30			32			40				64		
6	A	A																																						
8	A	A	A	A																																				
12		A		A					A																															
16				A					A								A																							
20				A	B	C		D	A	B	C		D							A	B	C	D	D										A	B	C				
25				A		C		D	A		C		D												A		C													
32				A	B	C		D	A	B	C		D							A	B	C	D	D							A	B	C					A	B	C
40				A	B	C		D	A	B	C		D	A	B	C	A	B	C	A	B	C		D	A	B	C	A	B	C				A	B	C	D			
50				A				D	A				D	A			A			A				D	A			A						A			D			
63									A											A														A						
80									A											A														A						

A = SEB-F and SEB-L
B = SEC-F and SEC-L
C = SES-F and SES-L
D = SEE-F

Bearing

Bearing		Page
LAF 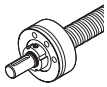		114
LAN 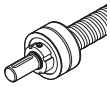		116
LAD		118

Lead p

Diameter d_0	1	2	2,5	5	10	12	16	20	25	30	32	40	64
6	LAF	LAF											
8	LAF	LAF	LAF	LAF									
12		LAF		LAN / LAD	LAN / LAD								
16				LAN / LAD	LAN / LAD		LAN / LAD						
20				LAN / LAD	LAN / LAD			LAN / LAD				LAN / LAD	
25				LAN / LAD	LAN / LAD				LAN / LAD				
32				LAN / LAD	LAN / LAD			LAN / LAD			LAN / LAD		LAN / LAD
40				LAN / LAD	LAN / LAD	LAN / LAD	LAN / LAD	LAN / LAD	LAN / LAD	LAN / LAD		LAN / LAD	
50				LAN / LAD	LAN / LAD	LAN / LAD	LAN / LAD	LAN / LAD	LAN / LAD	LAN / LAD		LAN / LAD	
63					LAN / LAD			LAN / LAD				LAN / LAD	
80					LAN / LAD			LAN / LAD				LAN / LAD	

LAF LAN / LAD

LAL		120

Lead p

Diameter d_0	1	2	2.5	5	10
6	LAL	LAL			
8	LAL	LAL	LAL	LAL	
12		LAL		LAL	LAL
16				LAL	LAL
20				LAL	LAL
25				LAL	LAL
32				LAL	LAL

LAL

LAS 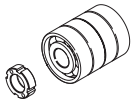		122

Lead p

Diameter d_0	5	10	12	16	20	25	32	40	64
16	LAS	LAS		LAS					
20	LAS	LAS			LAS			LAS	
25	LAS	LAS				LAS			
32	LAS	LAS			LAS	LAS	LAS		LAS
40	LAS	LAS	LAS	LAS	LAS			LAS	
50	LAS	LAS	LAS	LAS	LAS	LAS		LAS	
63		LAS			LAS			LAS	
80		LAS	LAS					LAS	

LAS

Accessories

The load capacities of bearing and ball screw drive must be kept in reasonable balance.

Single parts		Page
Slotted nut NMA, NMZ		124
Assembly tool for NMA/NMZ/NMG		125
Ring nut GWR		125
Front lube unit		126
Measuring pads		131
Arrestor nut		131

Acceptance conditions		Page
		134

Definition of ball screw assembly

ISO 3408-1 defines a ball screw assembly as follows:
A unit consisting of a ball screw shaft, ball nut and balls which is able to convert rotary motion into linear motion, and vice versa.
The basic functioning of a ball screw assembly is easy to describe, but there are numerous different designs and requirements for practical applications.
Several innovations and adaptations have contributed to the extension of the product portfolio.

Rexroth ball screw assemblies provide design engineers with diverse solutions for transport and positioning tasks with driven screws or with driven nuts.
At Rexroth you will be sure to find exactly the kind of tailor-made products you need for special applications.

The flange nuts from the standard series are available in versions with Rexroth or DIN mounting dimensions.
In order to make it easier in future for customers to decide between particular series and/or sizes in terms of delivery time too, we have introduced **A, B and C** categories for nuts.
Each individual nut part number is assigned to a particular category.
A parts (GoTo Europe Focused Delivery Program) are always stocked to meet average order quantities.
B parts (corresponds to standard range) are in stock, whereas
For **C parts,** inquiries have to be made regarding the delivery capability.

For deliveries within Europe, there is the quantity-dependent GoTo Europe Focused Delivery Program.
The special delivery times and quantities can be found in the “GoTo Europe Focused Delivery Program” catalog.

Almost all single nuts in the version with backlash can be easily mounted on the screw by the customer himself, especially during servicing. In addition, the standard series adjustable-preload single nut allows the customer to carry out preload adjustment in-house.
Appropriate nut housings for the standard series and several types of end bearings are also stocked.

Precision screws

in a variety of sizes and of unequaled quality have long been an essential part of our product range. Our comprehensive, worldwide stocks guarantee fast response times in every location. Availability is one advantage, low prices another. Every nut featured in this catalog can be combined with precision screws.
Precision screws can also be supplied without nuts to allow customers to machine the screw ends themselves.
For special servicing jobs, please consult us.

Calculation software and product configuration tool

The Linear Motion Designer (LMD) calculation software is used for designing and calculating ball screw assemblies BASA.

The CAD model is created via the product configuration tool.
This can be accessed via the Rexroth online portal / eConfigurators and Tools.

www.boschrexroth.de/gewindetriebkonfigurator

This online configuration tool makes it possible to visually configure ball screw assemblies quickly to match specific requirements in each case.
The tool automatically checks the plausibility of changed parameters. The link to the eShop means that ball screw assemblies can be directly ordered at any time of the day or night.

Benefits

- Smooth functioning due to the principle of internal recirculation
- Especially smooth running due to the optimal pick-up of balls from the raceway
- Adjustable-pre-tensioned single nut
- High load rating due to large number of balls
- Short nut length
- No protruding parts, nut is easily mounted
- Smooth outer shell
- Effective, wiping sealing
- Large range of series available ex stock

Ball screw assemblies for all applications

Drive units

You will find further system solutions in our catalog on Rexroth Drive Units.
This catalog contains ball screw assemblies with a protecting housing, including versions with integrated screw supports and matching AC servo motors.

To perform particularly demanding positioning tasks we have developed the integrated measuring system for ball rail and roller rail systems. This enables us to achieve maximum design flexibility and operating precision.

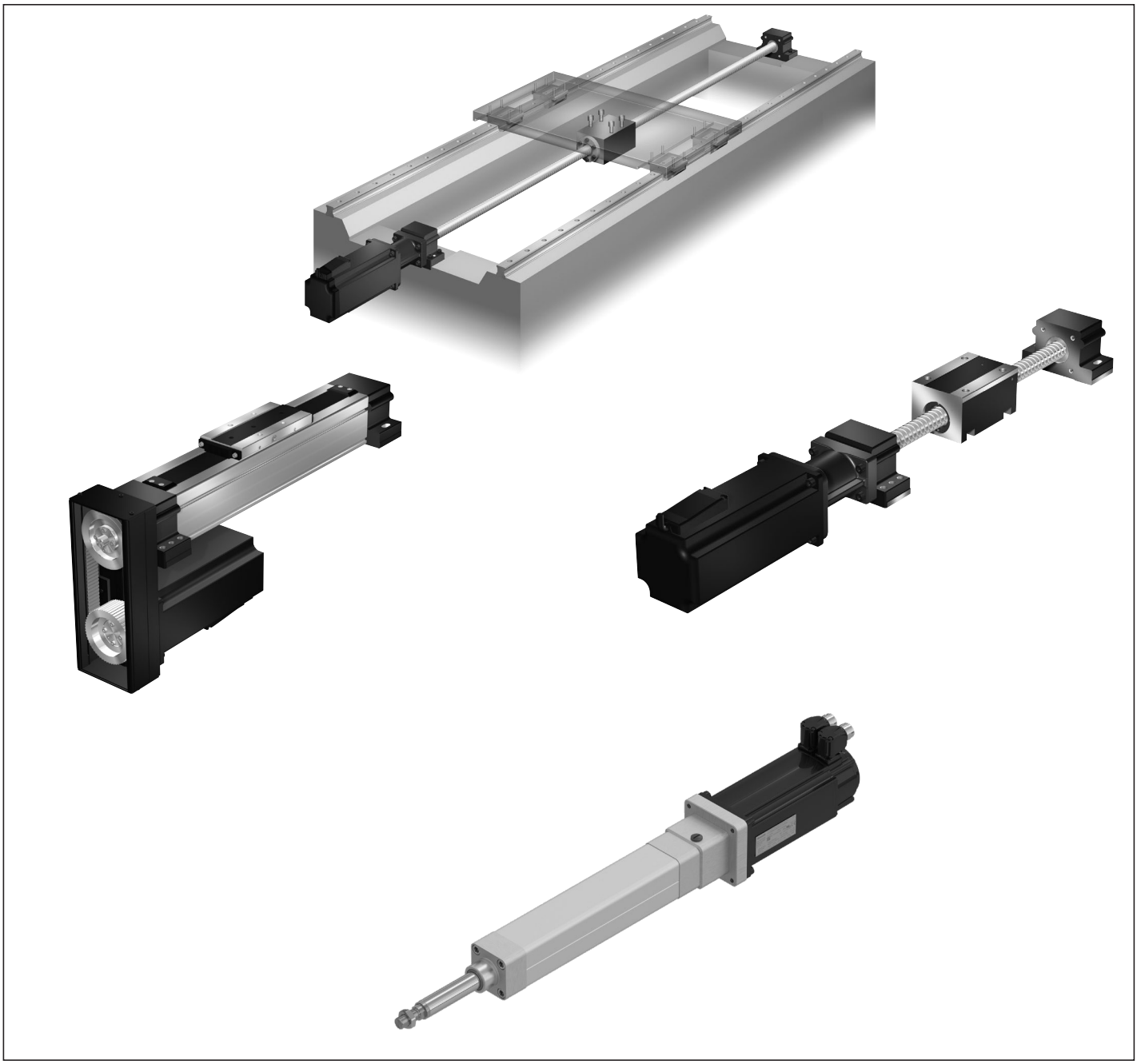

Sample applications

Rexroth ball screw assemblies have been successfully implemented worldwide in the following areas:

- Cutting operations
- Forming operations
- Automation and handling
- Woodworking
- Electrical and electronics
- Printing and paper industry
- Injection molding machines
- Food and packaging industries
- Medical technology
- Textile industry
- etc.

Machining center

Vertical axis with driven nut

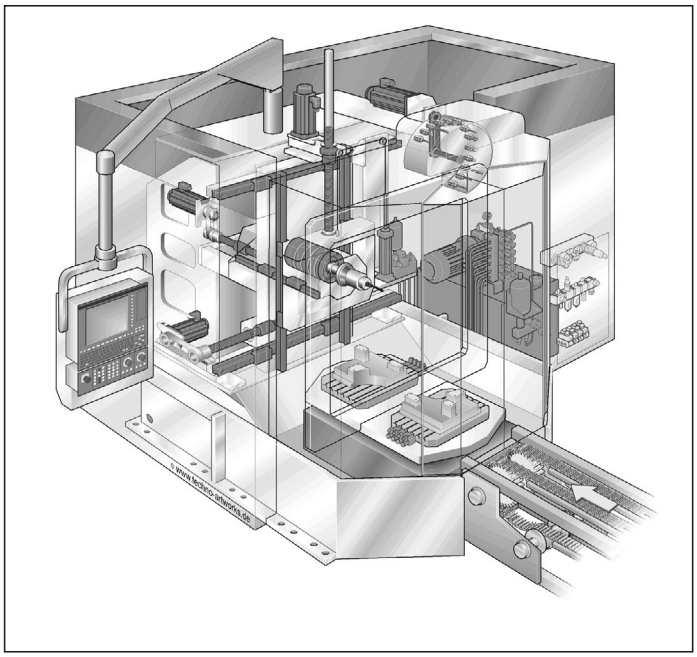

Press brake

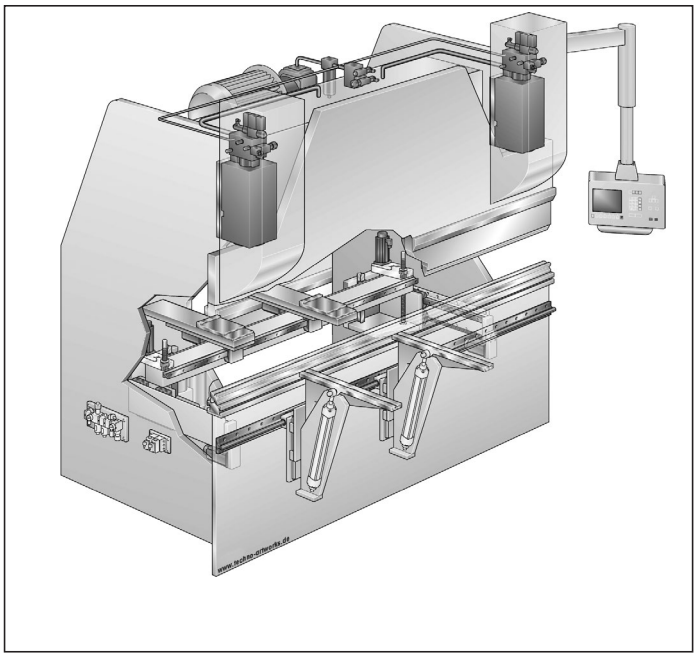

Lathe

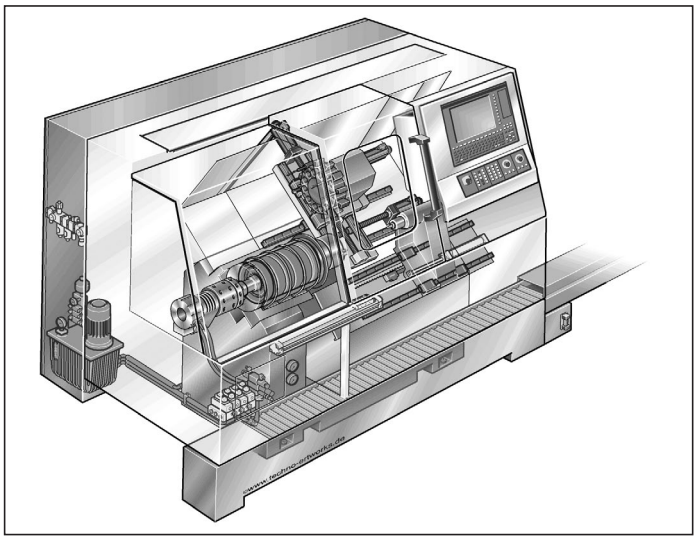

Inquiries and orders

All nuts, screws and end machining details can now be defined with the ordering code as a complete precision ball screw assembly.
We have taken account of all the existing selection criteria as well as adding new ones. The diversity of possible combinations and specifications is basically limitless. Attention is focused in particular on the definition of end machining details. For many design versions there is a prepared definition, which means that a suitable solution can be devised for virtually any application. If you wish to send us an inquiry, simply complete the form at the end of this catalog.

- If you submit a manufacturing drawing as a CAD file in Pro/E, STEP or DXF, you can e-mail the data to us.
- If the drawing exists on paper only, we will of course accept a scan or a drawing sent by conventional mail.
- If no drawing is available, please specify your wishes using the variable ordering code. The available options are shown at several places in the catalog.

Each customer-specific ball screw assembly is issued with an ID number when an order is placed. For queries or repeat orders, simply quote this number. If you know the specific ordering code you can also easily generate a CAD drawing yourself in numerous file formats via the functionality provided on our website.
Rexroth offers an online product configuration tool for this and for directly submitting product requests.
To configure specific solutions quickly and easily, simply go to www.boschrexroth.de/gewindetrieb-konfigurator.
This online tool enables you to visually configure the specific ball screw assembly or planetary screw assembly that you need. You can select any catalog option or any defined product modification. The tool automatically checks the plausibility of changed parameters. Once configuration is complete, 2D and 3D data is available for download in all established formats. As regards end machining, you can choose either standard versions or tailor-made solutions. Rexroth machines the screw ends of the ball screw assembly or planetary screw assembly so that it matches the customer's connecting design and fulfills the desired requirements. The configuration tool which is incorporated into the eShop allows you to obtain a price for customer-specific ball screw assemblies, and also to directly order the product.
The screw diameter size that can be selected for ball screw assemblies ranges from 6 to 80 millimeters. In addition, any type of nut can be chosen.

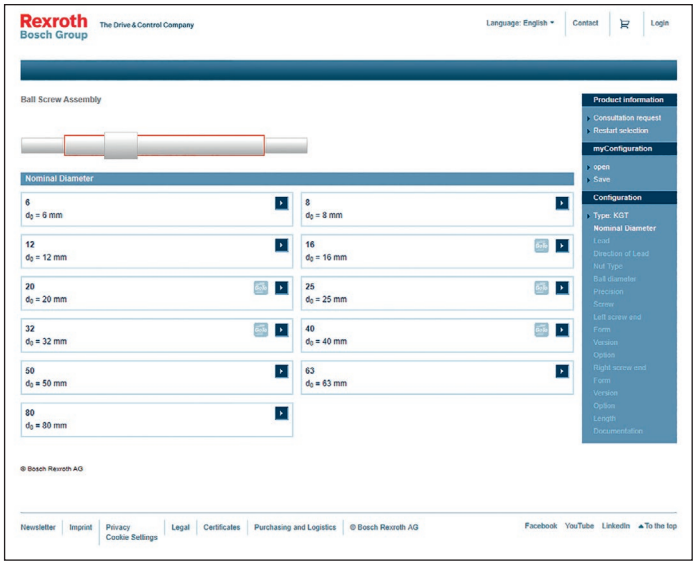

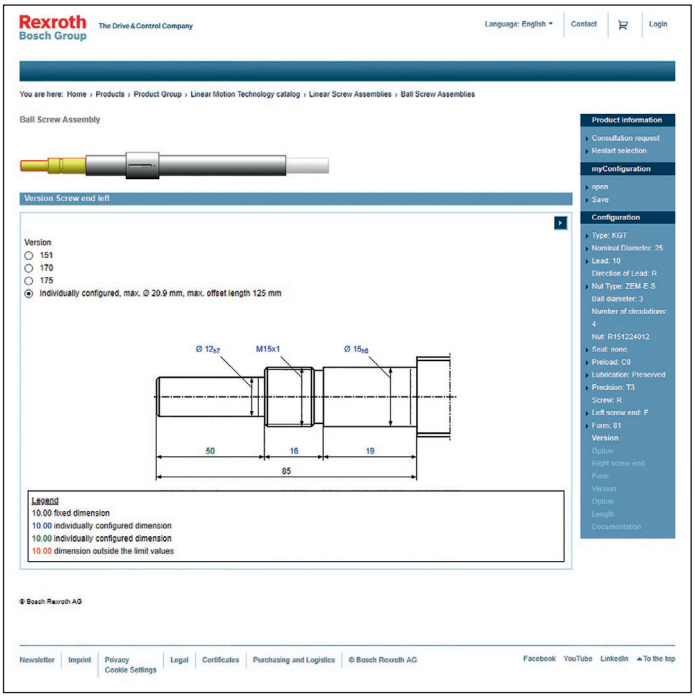

Customers who are registered in the eShop can generate manufacturing drawings as well as requesting CAD models. This drawing can then be used directly by our production departments, which accelerates order processing and delivery. What's more, in this case you can order directly in the eShop.
In the case of configuration without prior registration, only CAD models are provided. We can refer to this if an order is placed, and use it to produce a manufacturing drawing.

Access the eShop via this link: https://www.boschrexroth.com/eshop

The ordering code provided on page 22 covers all the parameters of a ball screw assembly. Once you have defined the nominal diameter and lead and entered the total length, the functionality guides you through a succession of dialog boxes allowing you to select the desired options.

Nominal diameters, leads

Lead P

Nominal diameter d_0	1	2	2,5	5	10	12	16	20	25	30	32	40	64
6	■	■											
8	■	■	■	■									
12		■		■	■								
16				■	■		■						
20				◢	■			◢				■	
25				◢	◢				◢				
32				◢	◢			◢			◢		■
40				◢	◢	■	■	◢	■	■		◢	
50				■	■	■	■	■	■	■		■	
63					■			■				■	
80					■			■				■	

■ Available ball nut sizes
◢ Combinable with VSE

Overall length L_{tot} of a ball screw assembly

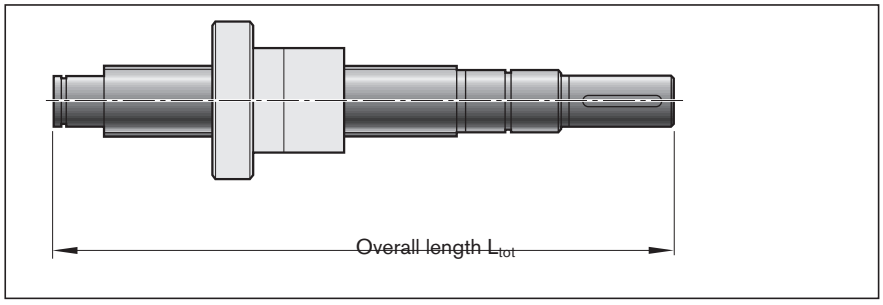

Identification system for short product names BASA / ordering data

Ball screw assembly BASA 20 x 5 R x3 FEM-E-B - 4 00 1 2 T7 R 81 A Z 120 41 A Z 120 1234.5 0 1

Size
- Nominal diameter (mm)
- Lead (mm)
- Direction of lead
  R ... right, L ... left
- Ball diameter (mm)

Nut type
- FEM-E-B Single nut with flange miniature series
- FEP-E-S Single nut with flange with recirculation caps
- FEM-E-S Single nut with flange
- **FEM-E-B** Single nut with flange DIN 69051, Part 5
- SEM-E-S Adjustable-preload single nut
- SEM-E-C Adjustable-preload single nut DIN 69051, Part 5
- ZEM-E-S Cylindrical single nut
- ZEM-E-K Cylindrical single nut
- ZEM-E-A Cylindrical single nut
- ZEV-E-S Screw-in nut
- FDM-E-S[4] Double nut with flange
- FDM-E-B[4] Double nut with flange DIN 69051, Part 5
- FED-E-B Single nut with flange
- FAR-B-S Driven single nut with flange
- Number of ball track turns in the nut

Nut rework
- **00** ... no rework
- 02 ... axial lube point

Sealing system
- 0 ... no seals
- **1** ... standard seal
- 2[1] ... reinforced seal
- 3[2] ... low-friction seal

Preload classes
- 0 ... C0 (standard backlash)
- 1 ... C00 (reduced backlash)
- **2** ... C3[3] (high preload SN[5])
- 3 ... C1 (slight preload SN[5])
- 4 ... C4 (high preload DN[6])
- 5 ... C5 (average preload DN[6])
- 6 ... C2 (average preload SN)

Accuracy T3, T5, **T7**, T9

Screw **R** ... Precision screw BAS

Left screw end
- Form: ... standard form
  - ...**A** with wrench flat on the ball screw
  - ...B with wrench flat on the collar
- Option (machining of end face):
  - **Z**... centering per DIN 332-D
  - S... hex socket
  - G...female thread
  - K... none
- Versions: ... standard version

Right screw end ... see left screw end

Overall length [mm]

Documentation
- **0** ... Standard (acceptance test report)
- 1 ... Lead test report
- 2 ... Torque test report
- 3 ... Lead and torque test report
- 5 ... Two-point compensation
- 5 ... Torque test report and Two-point compensation

Lubrication
- 0 ... Preserved
- **1** ... Preserved and nut with basic greasing
- 2 ... Front lube unit on left, ball nut with basic greasing
- 3 ... Front lube unit on right, ball nut with basic greasing
- 4 ... Front lube unit at both ends, ball nut with basic greasing

1) only for d_0 25 to 63; consider the higher frictional torque! See page 144
2) See page 144 for sizes
3) only for d_0 16 to 80
4) FDM-E-S and FDM-E-B only available as a complete ball screw assembly.
5) SN = Single nut
6) DN = Double nut

Mounting direction of nut types

Definition: The centering diameter on a nut with flange, the slotted nut on a driven nut, and the lube bore on a cylindrical nut points to the right end of the screw.

Note: The front lube unit is delivered ready-mounted to the ball screw assembly.

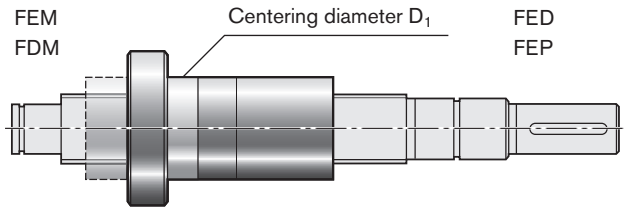

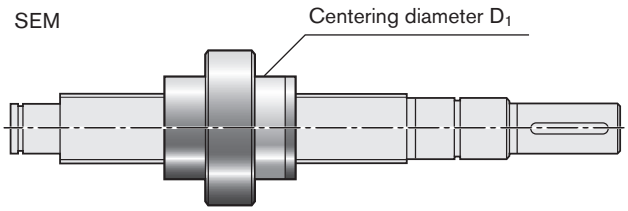

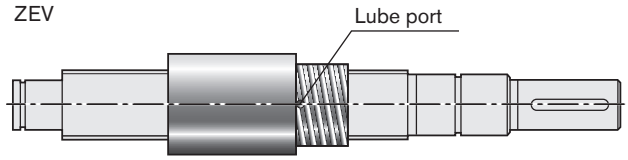

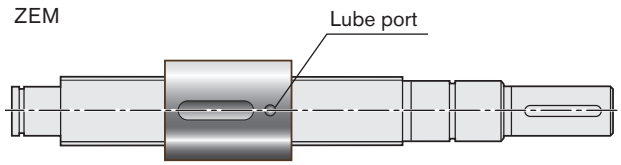

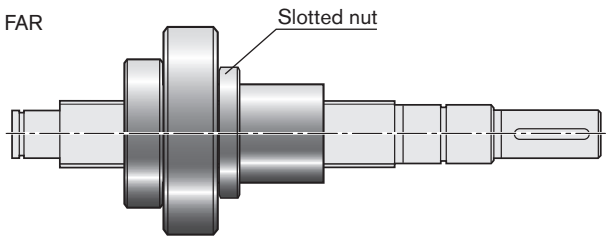

Nuts, miniature series

Miniature series
Miniature series ball screw assemblies are available with nominal diameters of 6 – 12 mm, and leads of 1 – 10 mm.
The nut types are flange, cylindrical and adjustable-preload single nuts as well as screw-in nuts.

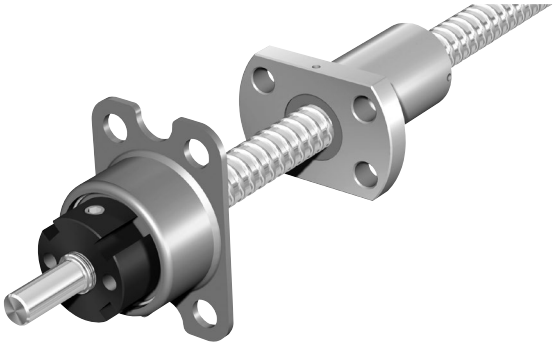

Overview of formats

FEM-E-B

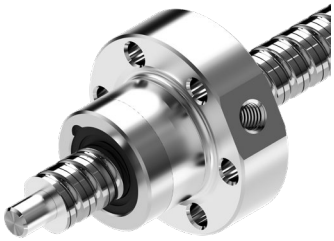

FEM-E-S

SEM-E-S

ZEM-E-S

ZEV-E-S

Preload classes

Option	Preload class	Definition
0	C0	Standard backlash
1	C00	Reduced backlash
2	C3	High preload (single nut)
3	C1	Moderate preload (single nut)
4	C4	High preload (double nut)
5	C5	Average preload (double nut)
6	C2	Average preload (single nut)

See nut versions for allocation of the preload classes

Single nut with flange FEM-E-B

Rexroth connection dimensions flange type B

With seals, preload class: C0, C00
Except for size 8 x 2.5 and 12 x 5/10: Preload class C1.
Tolerance grade: T5, T7, T9

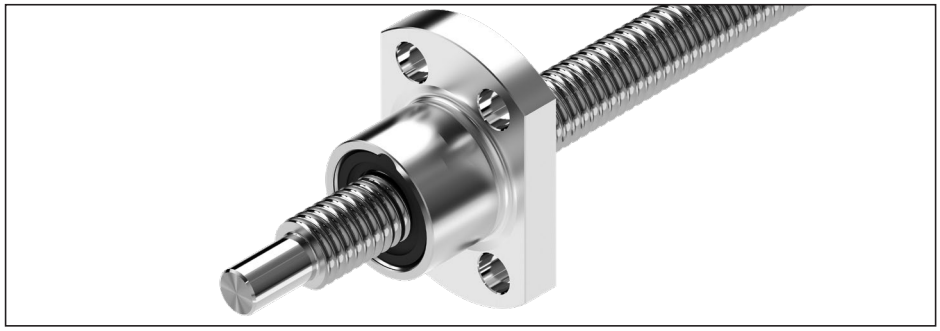

Ordering data:

BASA	8 x 2R x 1.2	FEM-E-B - 4	00	1	1	T7	R	831K062	41K050	250	0	1

d_0 = nominal diameter
P = lead (R = right-hand side)
D_W = ball diameter
i = number of ball track turns

Category	Size d_0 x P x D_w - i	Part number	Load ratings[3] dyn. C (N)	stat. C_0 (N)	Linear speed[1] v_{max} (m/min)
C	**6 x 1R x 0.8 - 3[2]**	R1532 100 16	1,080	1,030	6
C	**6 x 2R x 0.8 - 3[2]**	R1532 120 16	1,070	1,020	12
C	**8 x 1R x 0.8 - 4[2]**	R1532 200 16	1,310	1,850	6
C	**8 x 2R x 1.2 - 4[2]**	R1532 220 16	2,360	2,950	12
C	**8 x 2.5R x 1.588 - 3**	R1532 230 06	2,640	2,800	15
C	**8 x 5R x 1.588 - 3**	R1532 260 06	2,500	2,650	30
B	**12 x 2R x 1.2 - 4[2]**	R1532 420 06	2,690	4,160	12
B	**12 x 5R x 2 - 3**	R1532 460 06	4,560	5,800	30
B	**12 x 10R x 2 - 2**	R1532 490 06	3,000	3,600	60

1) See “Characteristic speed $d_0 \cdot n$” on page 133 and “Critical speed n_{cr}” on page 174
2) Supplied only as complete ball screw assembly.
3) The load ratings are valid for tolerance grade T3 and T5 only.
For other tolerance grades, please take into account the correction factor f_{ac} on page 133.

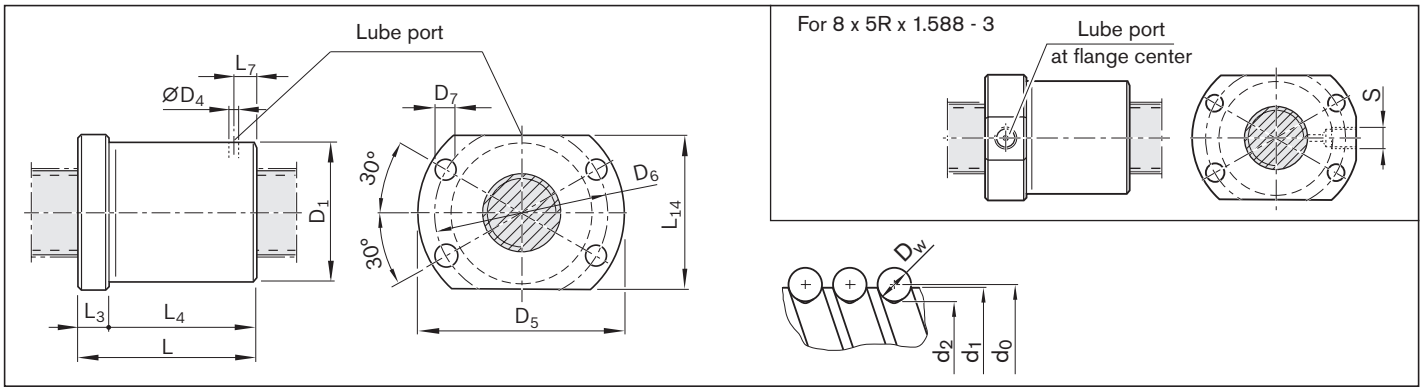

Size d_0 x P x D_w - i	(mm) d_1	d_2	D_1 g6	D_4	D_5	D_6	D_7	L	L_3	L_4	L_7	L_{14}	S	Mass m (kg)
6 x 1R x 0.8 - 3	6.0	5.3	12	1.5	24	18	3.4	11.6	3.5	8.1	3.5	16	–	0.020
6 x 2R x 0.8 - 3	6.0	5.3	12	1.5	24	18	3.4	14.6	3.5	11.1	3.0	16	–	0.020
8 x 1R x 0.8 - 4	8.0	7.3	16	1.5	28	22	3.4	15.5	6.0	9.5	3.5	19	–	0.035
8 x 2R x 1.2 - 4	8.0	7.0	16	1.5	28	22	3.4	19.5	6.0	13.5	3.0	19	–	0.050
8 x 2.5R x 1.588 - 3	7.5	6.3	16	2.0	28	22	3.4	16.0	6.0	10.0	3.0	19	–	0.030
8 x 5R x 1.588 - 3	7.5	6.3	16	–	28	22	3.4	23.5	6.0	17.5	–	19	M3	0.050
12 x 2R x 1.2 - 4	11.7	10.8	20	2.0	37	29	4.5	19.0	8.0	11.0	2.5	24	–	0.055
12 x 5R x 2 - 3	11.4	9.9	22	2.0	37	29	4.5	28.0	8.0	20.0	6.0	24	–	0.075
12 x 10R x 2 - 2	11.4	9.9	22	2.0	37	29	4.5	33.0	8.0	25.0	8.0	24		0.085

Single nut with flange FEM-E-S

Rexroth connection dimensions

With seals
Preload class: C0, C00, C1
Tolerance grade: T5, T7, T9

d_0 = nominal diameter
P = lead (R = right-hand)
D_W = ball diameter
i = number of ball track turns

Ordering data:

BASA	12 x 5R x 2	FEM-E-S - 3	00	1	1	T7	R	81K060	41K060	250	0	1

Category	Size d_0 x P x D_w - i	Part number	Load ratings[2] dyn. C (N)	stat. C_0 (N)	Linear speed[1] v_{max} (m/min)
C	**8 x 2.5R x 1.588 - 3**	R1532 230 03	2,640	2,800	15
A	**12 x 5R x 2 - 3**	R1532 460 23	4,560	5,800	30
A	**12 x 10R x 2 - 2**	R1532 490 13	3,000	3,600	60

1) See “Characteristic speed $d_0 \cdot n$” on page 133 and “Critical speed n_{cr}” on page 174
2) The load ratings are valid for tolerance grade T5 only.
For other tolerance grades, please take into account the correction factor f_{ac} on page 133.

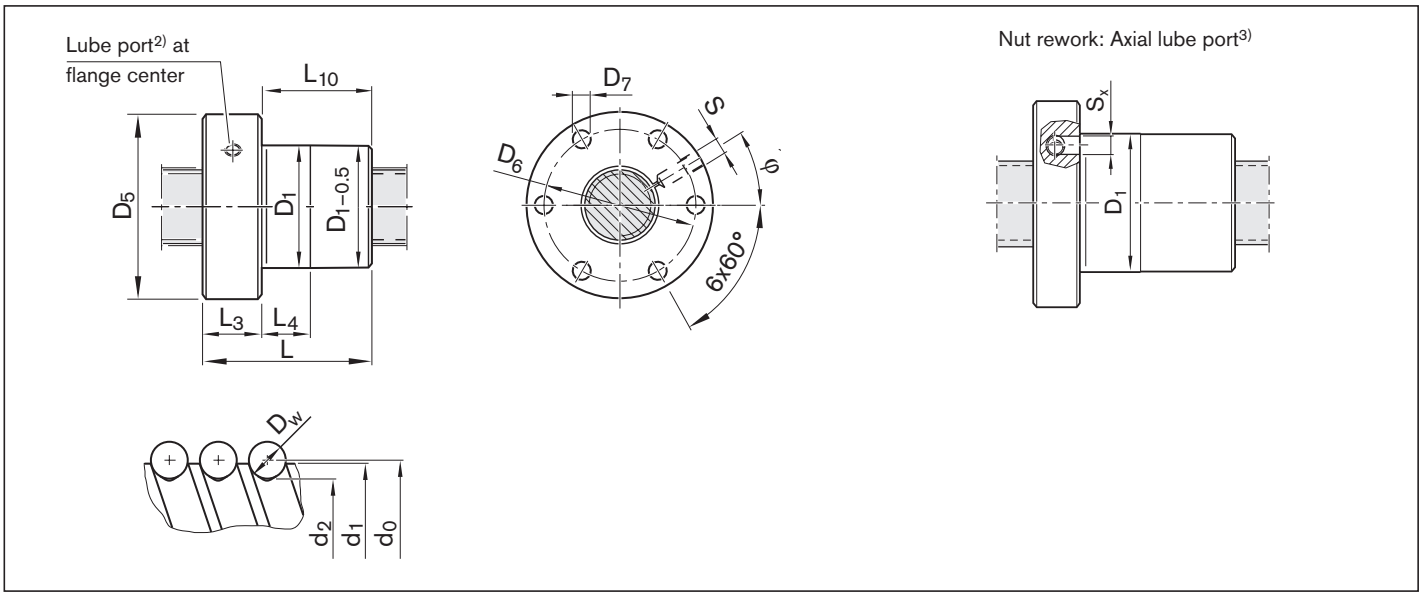

3) The axial lube port S_x is always located on the pitch circle D_6 of the nut unit.

Size d_0 x P x D_w - i	(mm) d_1	d_2	D_1 g6	D_5	D_6	D_7	L	L_3	L_4	L_{10}	S[4]	S_x	φ (°)	Mass m (kg)
8 x 2.5R x 1.588 - 3	7.5	6.3	16	30	23	3.4	16	8	8.0	8	Ø4	–	30.0	0.05
12 x 5R x 2 - 3	11.4	9.9	24	40	32	4.5	28	12	10.0	16	M6	4	330.0	0.12
12 x 10R x 2 - 2	11.4	9.9	24	40	32	4.5	33	12	16.0	21	M6	4	330.0	0.14

4) Lube port machining: flat surface $L_3 \leq 15$ mm, for size 8 x 2.5 a DIN 3405 funnel-type lube nipple is provided.

Adjustable-preload single nut SEM-E-S

Rexroth connection dimensions

With seals
Adjustable preload
Tolerance grade: T5, T7

d_0 = nominal diameter
P = lead (R = right-hand)
D_W = ball diameter
i = number of ball track turns

Ordering data:

BASA	12 x 5R x 2	SEM-E-S - 3	00	1	2	T7	R	81K060	41K060	250	0	1

Category	Size	Part number	Load ratings[2]		Linear speed[1]	Centering diameter D_1 after adjustment	
			dyn. C	stat. C_0	v_{max}		
	d_0 x P x D_w - i		(N)	(N)	(m/min)	min. (mm)	max. (mm)
C	**8 x 2.5R x 1.588 - 3**	R1532 230 04	2,640	2,800	15	15.953	15.987
B	**12 x 5R x 2 - 3**	R1532 460 24	4,560	5,800	30	23.940	23.975
B	**12 x 10R x 2 - 2**	R1532 490 14	3,000	3,600	60	23.940	23.975

1) See “Characteristic speed $d_0 \cdot n$” on page 133 and “Critical speed n_{cr}” on page 174
2) The load ratings are valid for tolerance grade T3 and T5 only. For other tolerance grades, please take into account the correction factor f_{ac} on page 133.

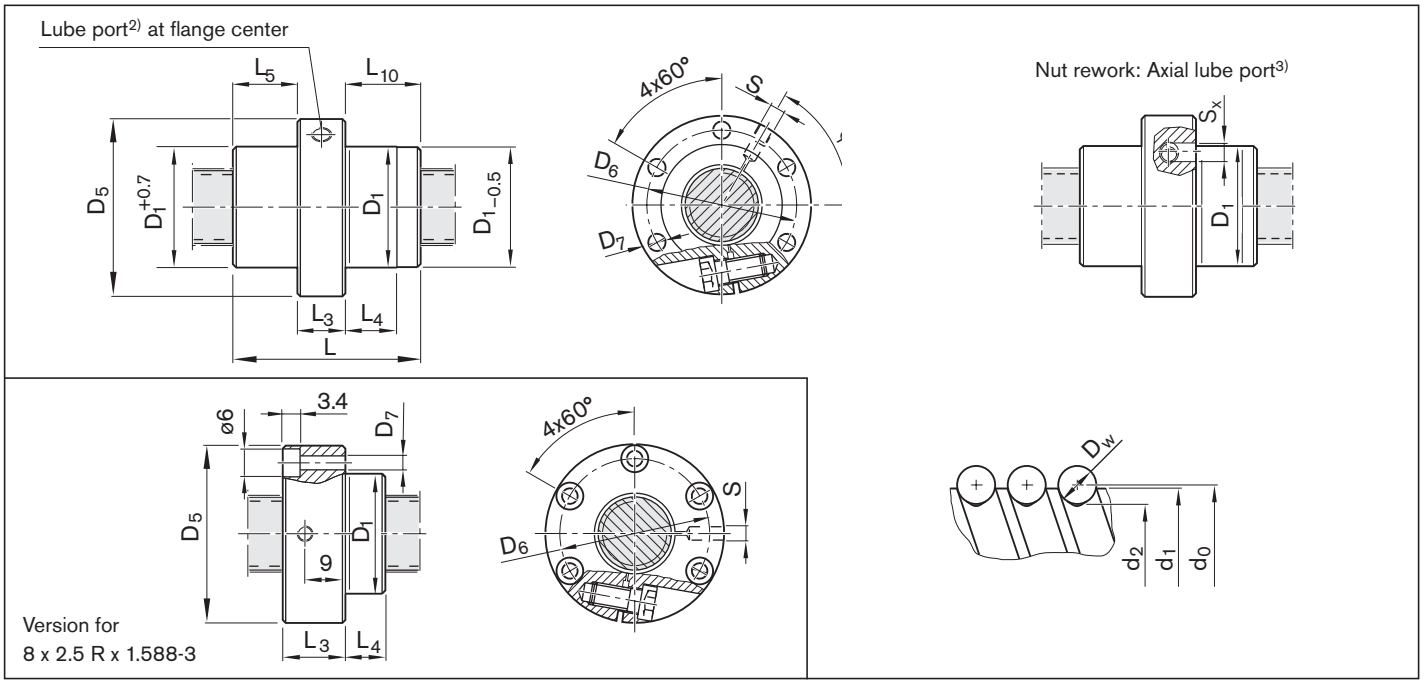

3) The axial lube port S_x is always located on the pitch circle D_6 of the nut unit.

Size	(mm)														Mass
d_0 x P x D_w - i	d_1	d_2	D_1 f9	D_5	D_6	D_7	L	L_3	L_4	L_5	L_{10}	S[4]	S_x	φ (°)	m (kg)
8 x 2.5R x 1.588 - 3	7.5	6.3	16	30	23	3.4	16	13	3.0	–	3.0	Ø4	–	0	0.06
12 x 5R x 2 - 3	11.4	9.9	24	40	32	4.5	28	12	8.0	8.0	8.0	M6	4	55	0.12
12 x 10R x 2 - 2	11.4	9.9	24	40	32	4.5	33	12	10.5	10.5	10.5	M6	4	55	0.13

4) Lube port machining: flat surface $L_3 \leq 15$ mm, for size 8 x 2.5 a DIN 3405 funnel-type lube nipple is provided.

Cylindrical single nut ZEM-E-S/ZEM-E-K

Rexroth connection dimensions

With seals
Preload class: C0, C00, C1
Except for size 6 x 1/2, 8 x 1/2, 12 x 2:
Preload class C0, C00

Tolerance grade: T5, T7, T9

d_0 = nominal diameter
P = lead (R = right-hand)
D_W = ball diameter
i = number of ball track turns

Ordering data:

BASA	12 x 5R x 2	ZEM-E-S - 3	00	1	1	T7	R	81K060	41K060	250	0	1

Category	Size d_0 x P x D_w - i	Part number	Load ratings[3] dyn. C (N)	stat. C_0 (N)	Linear speed[2] v_{max} (m/min)
C	**6 x 1R x 0.8 - 3** [1]	R1532 102 10	1 080	1 030	6
C	**6 x 2R x 0.8 - 3** [1]	R1532 122 10	1 070	1 020	12
C	**8 x 1R x 0.8 - 4** [1]	R1532 202 10	1 310	1 850	6
C	**8 x 2R x 1.2 - 4** [1]	R1532 222 10	2 360	2 950	12
C	**8 x 2.5R x 1.588 - 3**	R1532 230 02	2,640	2,800	15
C	**8 x 5R x 1.588 - 3**	R1532 260 02	2 500	2 650	30
B	**12 x 2R x 1,2 - 4** [1]	R1532 422 01	2,690	4,160	12
B	**12 x 5R x 2 - 3**	R1532 460 32	4,560	5,800	30
B	**12 x 5R x 2 - 3**	R1532 462 25	4,560	5,800	30
B	**12 x 10R x 2 - 2**	R1532 490 22	3,000	3,600	60
B	**12 x 10R x 2 - 2**	R1532 492 00	3,000	3,600	60

1) Supplied only as complete ball screw assembly.
2) See "Characteristic speed $d_0 \cdot n$" on page 133 and critical speed n_{cr} on page 174
3) The load ratings are valid for tolerance grade T5 only. For other tolerance grades, please take into account the correction factor f_{ac} on page 133.

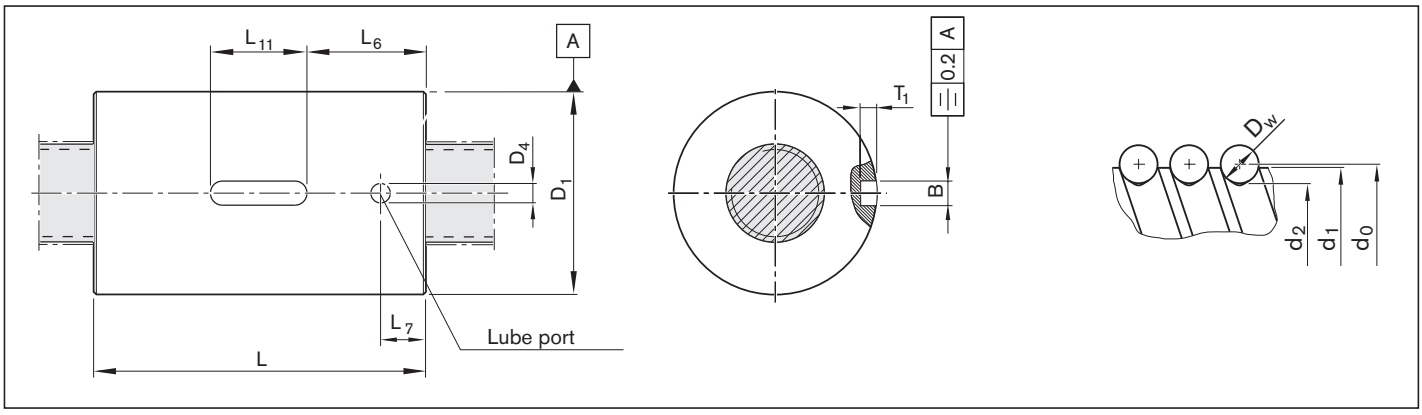

Size d_0 x P x D_w - i	(mm) d_1	d_2	D_1 g6	D_4	L ±0.1	L_6	L_7	L_{11} +0.2	B P9	T_1 +0.1	Mass m (kg)
6 x 1R x 0.8 - 3 [1]	6.0	5.3	12	1.5	11.6	-	3.5	-	-	-	0.014
6 x 2R x 0.8 - 3 [1]	6.0	5.3	12	1.5	14.6	-	3.1	-	-	-	0.015
8 x 1R x 0.8 - 4 [1]	8.0	7.3	16	1.5	15.5	5.00	3.5	6	3	1.2	0.023
8 x 2R x 1.2 - 4 [1]	8.0	7.0	16	1.5	19.5	5.00	3.1	6	3	1.8	0.037
8 x 2.5R x 1.588 - 3	7.5	6.3	16	2	16.0	5.00	3.5	6	3	1.8	0.02
8 x 5R x 1.588 - 3	7.5	6.3	16	2	23.5	7.75	3.5	8	3	1.8	0.04
12 x 2R x 1.2 - 4 [1]	11.7	10.8	21	2	19.0	5.50	3.5	8	3	1.8	0.03
12 x 5R x 2 - 3	11.4	9.9	24	2	28.0	8.00	3.5	12	5	3.0	0.06
12 x 5R x 2 - 3	11.4	9.9	21	2	28.0	8.00	3.5	12	3	1.8	0.04
12 x 10R x 2 - 2	11.4	9.9	24	2	33.0	10.50	3.5	12	5	3.0	0.07
12 x 10R x 2 - 2	11.4	9.9	21	2	33.0	10.50	3.5	12	3	1.8	0.05

Screw-in nut ZEV-E-S

Rexroth connection dimensions

With low-friction seal,
preload class: C0, C00, C1

Tolerance grade: T5, T7, T9

d_0 = nominal diameter
P = lead (R = right-hand)
D_W = ball diameter
i = number of ball track turns

Ordering data:

BASA	12 x 5R x 2	ZEV-E-S - 3	00	3	1	T7	R	81K060	41K060	250	0	1

Category	Size d_0 x P x D_w - i	Part number	Load ratings[2)] dyn. C (N)	 stat. C_0 (N)	Linear speed[1)] v_{max} (m/min)
C	**8 x 2.5R x 1.588 - 4**	R2542 230 05	3,490	3,910	15.0
B	**12 x 5R x 2 - 3**	R2542 430 05	4,560	5,800	30.0
B	**12 x 10R x 2 - 2**	R2542 430 15	3,000	3,600	60.0

1) See “Characteristic speed $d_0 \cdot n$” on page 133 and “Critical speed n_{cr}” on page 174
2) The load ratings are valid for tolerance grade T3 and T5 only.
For other tolerance grades, please take into account the correction factor f_{ac} on page 133.

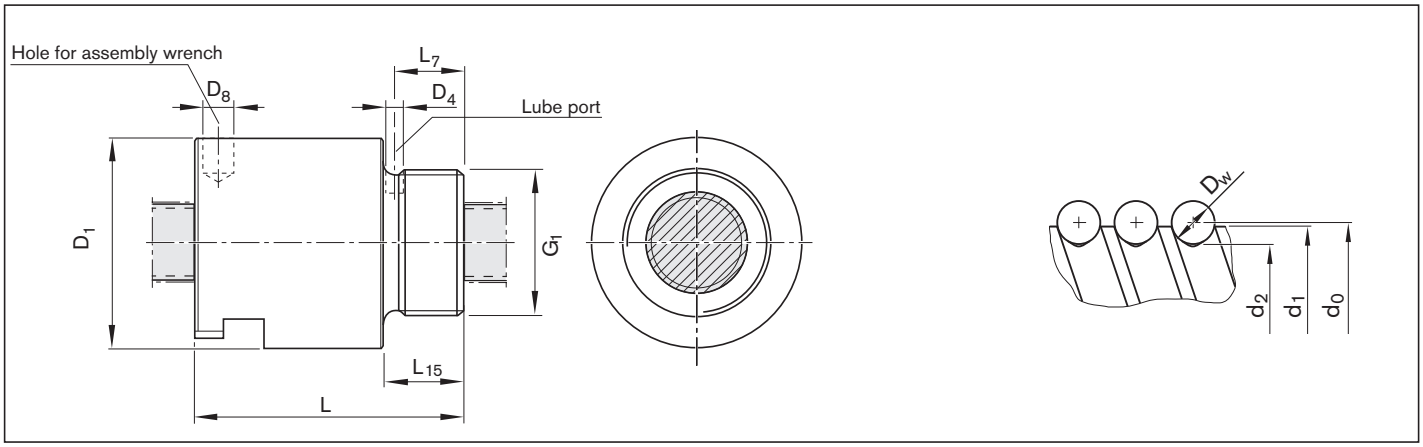

Size d_0 x P x D_w - i	(mm) d_1	d_2	D_1 h10	D_4	D_8	G_1	L ±0.3	L_7	L_{15}	Mass m (kg)
8 x 2.5R x 1.588 - 4	7.5	6.3	20.0	1.5	3.2	M18x1	20.5	6.7	8	0.06
12 x 5R x 2 - 3	11.4	9.9	25.5	2.7	3.2	M20 x 1.0	36	8.5	10	0.09
12 x 10R x 2 - 2	11.4	9.9	25.5	2.7	3.2	M20 x 1.0	40	8.5	10	0.10

Nuts, Speed Series

Speed series

Speed series ball screw assemblies are available with nominal diameters of 20 – 32 mm, and leads of 25 – 64 mm.
The nut type is a single nut with flange.
The distinguishing feature of the speed series is its compact design.
Multi-start screws allow a higher load rating with a short nut. The oversquare leads enable the realization of high traversing speeds.

Preload classes

Option	Preload class	Definition
0	C0	Standard backlash
1	C00	Reduced backlash
2	C3	High preload (single nut)
3	C1	Moderate preload (single nut)
4	C4	High preload (double nut)
5	C5	Average preload (double nut)
6	C2	Average preload (single nut)

See nut versions for allocation of the preload classes

Single nut with flange with recirculation caps FEP-E-S

Rexroth connection dimensions

With seals, preload class: C0, C00, C1
Tolerance grade: T5, T7, T9

⚠ Do not exert force on the plastic recirculation caps or allow them to collide with end stops.

Note: Supplied only as complete ball screw assembly.

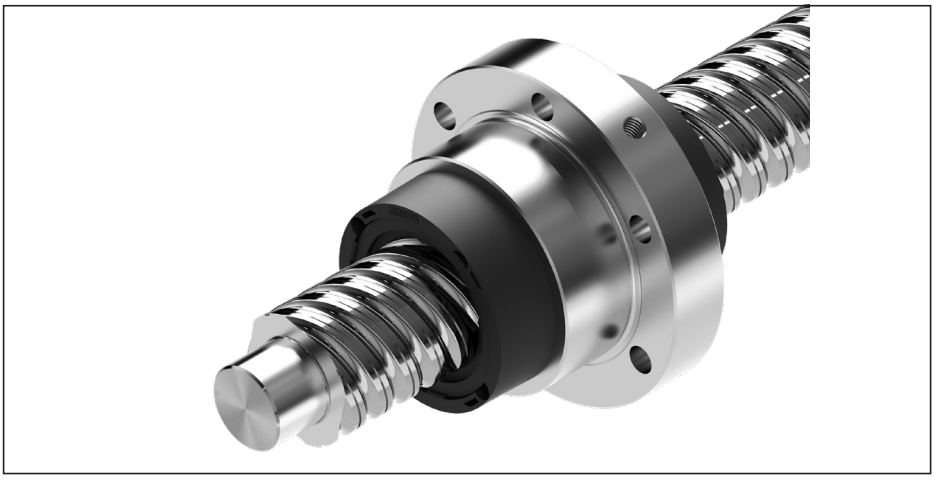

Ordering data:

BASA	25 x 25R x 3.5	FEM-E-S - 4.8	00	1	0	T5	R	81K170	41K170	1100	0	1

d_0 = nominal diameter
P = lead (R = right-hand)
D_W = ball diameter
i = number of ball track turns

Category	Size d_0 x P x D_w - i	Part number	Load ratings[2] dyn. C (N)	stat. C_0 (N)	Linear speed[1] v_{max} (m/min)
C	**20 x 40R x 3.5 - 4**	R2522 100 11	14,000	26,200	240
C	**25 x 25R x 3.5 - 4.8**	R2522 200 01	19,700	39,400	150
C	**32 x 32R x 3.969 - 4.8**	R2522 300 01	26,300	57,600	150
C	**32 x 64R x 3.969 - 4**	R2522 300 21	21,100	49,000	300

1) See "Characteristic speed $d_0 \cdot n$" on page 133 and "Critical speed n_{cr}" on page 174
2) The load ratings are valid for tolerance grade T3 and T5 only.
For other tolerance grades, please take into account the correction factor f_{ac} on page 133.

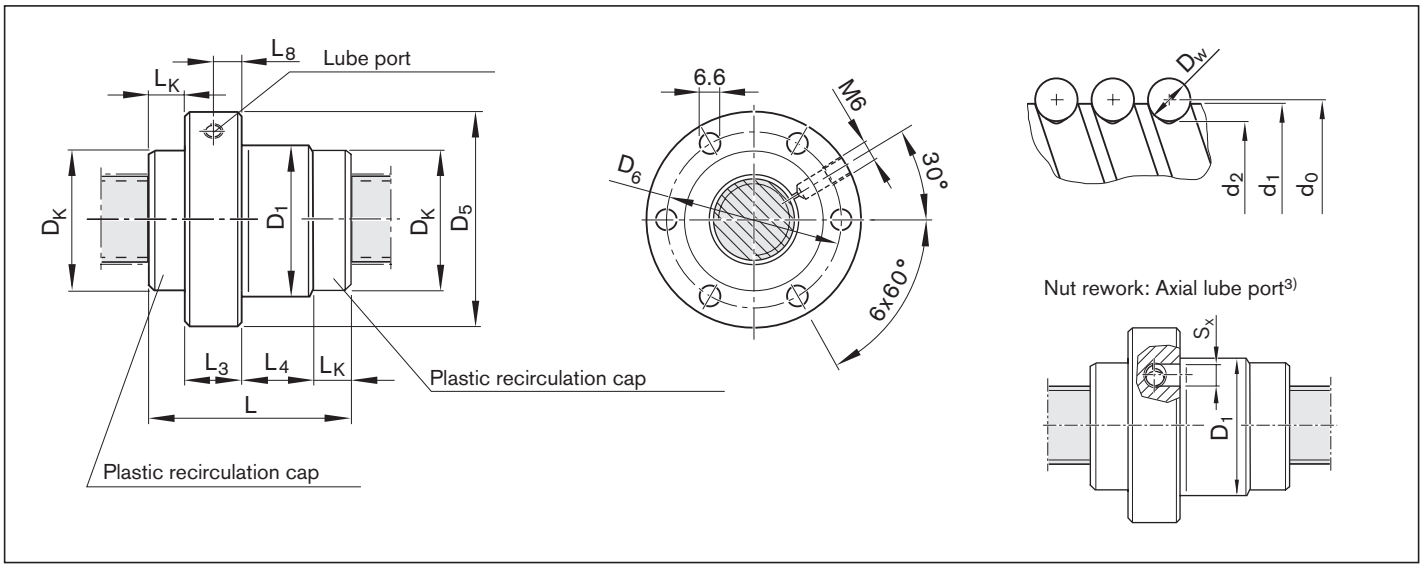

3) The axial lube port S_x is always located on the pitch circle D_6 of the nut unit.

Size d_0 x P x D_w - i	(mm) d_1	d_2	D_1 g6	D_5	D_6	D_K	L ±0.5	L_3	L_4	L_8	L_K	S_x	Mass m (kg)
20 x 40R x 3.5 - 4	19	16.4	38	63	50	37.5	57	12	23	8.0	11	4	0.51
25 x 25R x 3.5 - 4.8	24	21.4	48	73	60	40.0	52	12	14	5.0	13	4	0.51
32 x 32R x 3.969 - 4.8	31	27.9	56	80	68	50.0	68	15	21	7.7	16	4	0.78
32 x 64R x 3.969 - 4	31	27.9	56	80	68	50.0	88	15	45	7.5	14	4	1.06

Nuts, standard series

Standard series ball screw assemblies
are available with nominal diameters of 16 – 80 mm, and leads of 5 – 40 mm.
The nut types are flange, cylindrical and adjustable-preload single nuts, double nuts with flange, as well as screw-in nuts.

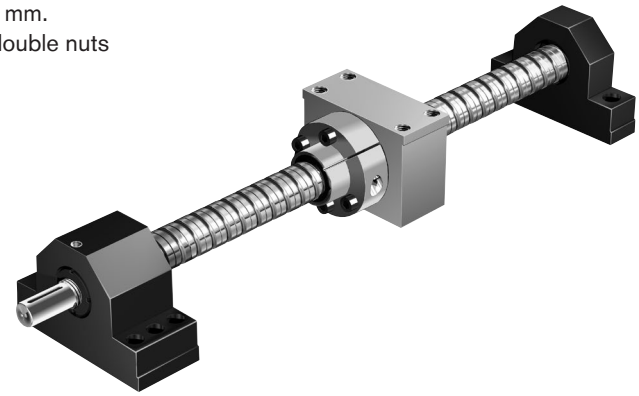

Benefits
- High axial load-bearing capacity
- High dynamics
- High rigidity
- Low friction
- Available from stock in many versions and sizes
- Nut housing with reference edge (both sides)

Preload classes

Option	Preload class	Definition
0	C0	Standard backlash
1	C00	Reduced backlash
2	C3	High preload (single nut)
3	C1	Moderate preload (single nut)
4	C4	High preload (double nut)
5	C5	Average preload (double nut)
6	C2	Average preload (single nut)

See nut versions for allocation of the preload classes

Overview of formats

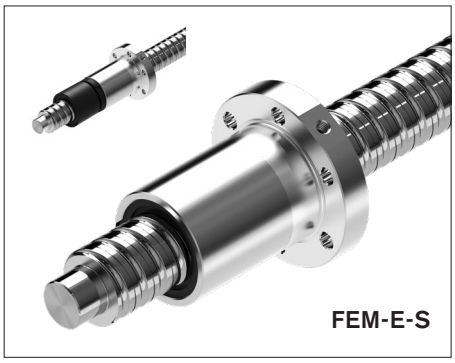

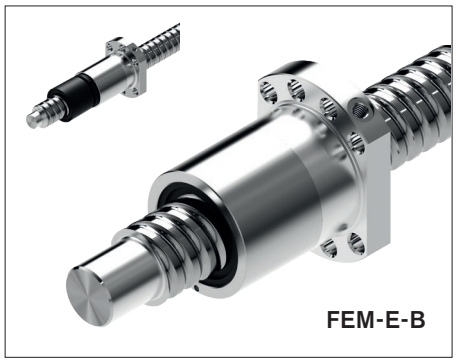

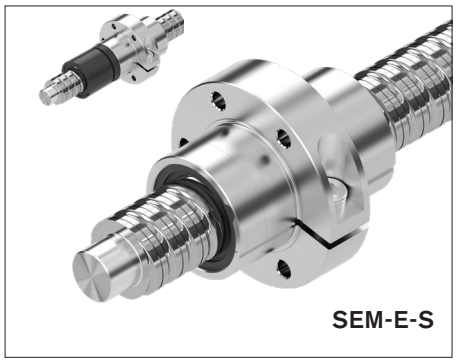

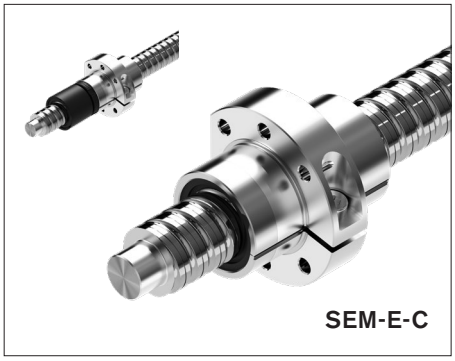

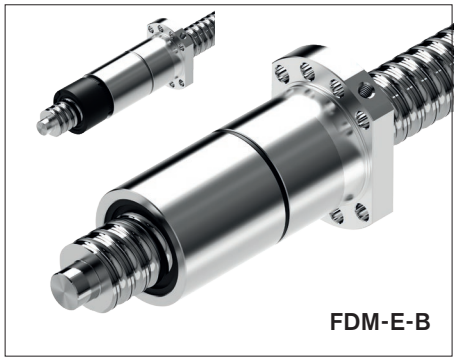

Single nut with flange FEM-E-S

Rexroth connection dimensions

With seals
Left-hand version in some cases
Preload class: C0, C00, C1, C2, C3
Tolerance grade: T3[2], T5, T7, T9

Note: The front lube unit is only available for the right-hand version.

⚠ **When setting up applications, do not allow components to collide with the front lube unit.**

Ordering data:

BASA	20 x 5R x 3	FEM-E-S - 4	00	1	2	T7	R	82Z120	41Z120	1250	0	1

d_0 = nominal diameter
P = lead (R = right-hand, L = left-hand)
D_W = ball diameter
i = number of ball track turns

Category	Size d_0 x P x D_w - i	Part number	Load ratings[3] dyn. C (N)	stat. C_0 (N)	Linear speed[1] v_{max} (m/min)
A	16 x 5R x 3 - 4	R1512 010 23	14,800	16,100	30
A	16 x 10R x 3 - 3	R1512 040 13	11,500	12,300	60
A	16 x 16R x 3 - 2	R1512 060 13	7,560	7,600	96
A	20 x 5R x 3 - 4	R1512 110 13	17,200	21,500	30
A	20 x 10R x 3 - 4	R1512 140 13	16,900	21,300	60
A	20 x 20R x 3.5 - 2	R1512 170 13	10,900	12,100	120
A	25 x 5R x 3 - 4	R1512 210 13	19,100	27,200	30
A	25 x 10R x 3 - 4	R1512 240 13	18,800	27,000	60
A	25 x 25R x 3.5 - 2	R1512 280 13	12,100	15,100	150
A	32 x 5R x 3.5 - 4	R1512 310 13	25,900	40,000	23
A	32 x 10R x 3.969 - 5	R1512 340 13	38,000	58,300	47
A	32 x 20R x 3.969 - 2	R1512 370 13	16,200	21,800	94
A	32 x 32R x 3.969 - 2	R1512 390 13	16,100	22,000	150
A	40 x 5R x 3.5 - 5	R1512 410 13	34,900	64,100	19
A	40 x 10R x 6 - 4	R1512 440 13	60,000	86,400	38
B	40 x 10R x 6 - 6	R1512 440 23	86,500	132,200	38
A	40 x 20R x 6 - 3	R1512 470 13	45,500	62,800	75
A	40 x 40R x 6 - 2	R1512 490 13	30,600	40,300	150
B	50 x 5R x 3.5 - 5	R1512 510 13	38,400	81,300	15
B	50 x 10R x 6 - 6	R1512 540 13	95,600	166,500	30
C	50 x 16R x 6 - 6	R1512 560 13	95,300	166,000	48
B	50 x 20R x 6.5 - 3	R1512 570 13	57,500	87,900	60
B	50 x 40R x 6.5 - 2	R1512 590 13	38,500	55,800	120
B	63 x 10R x 6 - 6	R1512 640 13	106,600	214,300	24
B	63 x 20R x 6.5 - 3	R1512 670 13	63,800	112,100	48
B	63 x 40R x 6.5 - 2	R1512 690 13	44,300	74,300	95
C	80 x 10R x 6.5 - 6	R1512 740 13	130,100	291,700	19
C	80 x 20R x 12.7 - 6	R1512 770 23	315,200	534,200	30
Versions with left-hand lead					
B	16 x 5L x 3 - 4	R1552 010 03	14,800	16,100	30
B	20 x 5L x 3 - 4	R1552 110 13	17,200	21,500	30
B	25 x 5L x 3 - 4	R1552 210 13	19,100	27,200	30
B	32 x 5L x 3.5 - 4	R1552 310 03	25,900	40,000	23
B	40 x 5L x 3.5 - 5	R1552 410 03	34,900	64,100	19
B	40 x 10L x 6 - 4	R1552 440 03	60,000	86,400	38

1) See “Characteristic speed $d_0 \cdot n$” on page 133 and “Critical speed n_{cr}” on page 174
2) Tolerance grade T3 for sizes shown in table page 12
3) The load ratings are valid for tolerance grade T3 and T5 only.
For other tolerance grades, please take into account the correction factor f_{ac} on page 133.

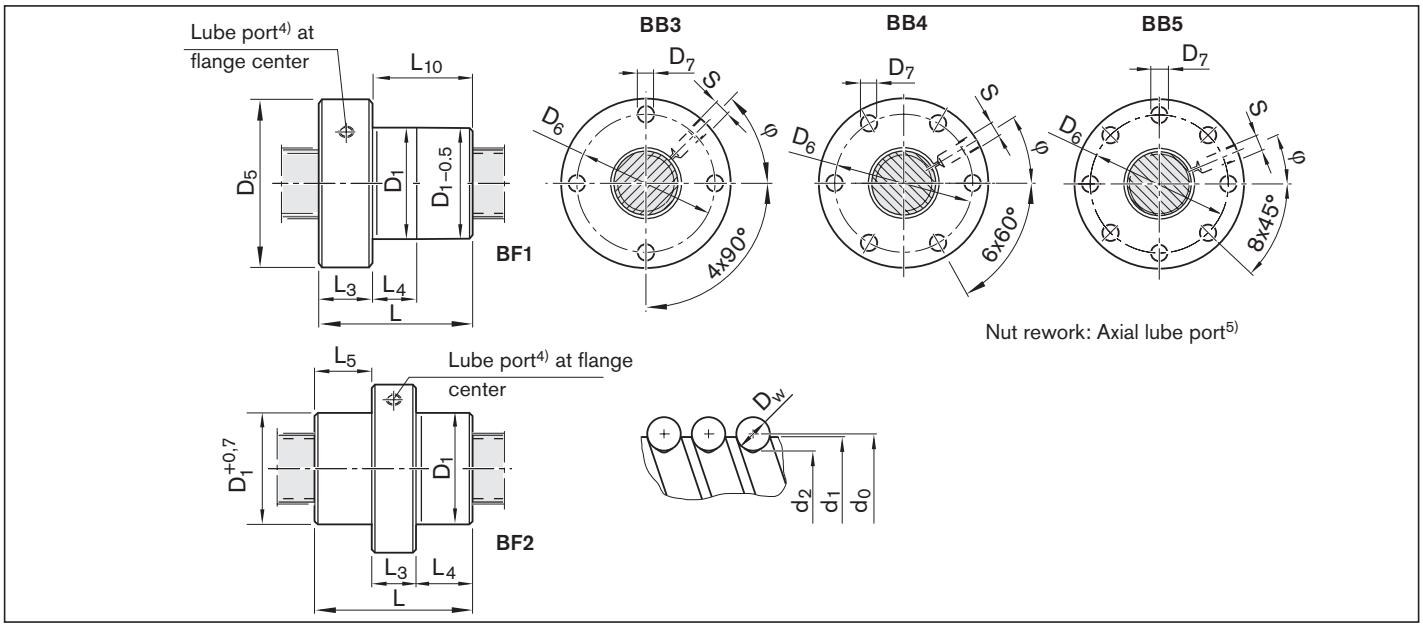

4) Lube port machining: flat surface $L_3 \leq 15$ mm, countersink $L_3 > 15$ mm;
5) The axial lube port S_x is always located on the pitch circle D_6 of the nut unit.

Size	(mm)																Mass
	d_1	d_2	D_1	D_5	Hole pattern	D_6	D_7	Design	L	L_3	L_4	L_5	L_{10}	S4)	S_x	φ	m
d_0 x P x D_w - i			g6					style								(°)	(kg)
16 x 5R x 3 - 4	15.0	12.9	28	53	BB3	40	6.6	BF1	38	12	10.0	–	26	M6	4	315.0	0.24
16 x 10R x 3 - 3	15.0	12.9	28	53	BB3	40	6.6	BF1	45	12	16.0	–	33	M6	4	315.0	0.25
16 x 16R x 3 - 2	15.0	12.9	33	58	BB4	45	6.6	BF2	45	15	15.0	15.0	–	M6	4	30.0	0.39
20 x 5R x 3 - 4	19.0	16.9	33	58	BB4	45	6.6	BF1	40	12	10.0	–	28	M6	4	30.0	0.28
20 x 10R x 3 - 4	19.0	16.9	33	58	BB4	45	6.6	BF1	60	12	16.0	–	48	M6	4	30.0	0.36
20 x 20R x 3.5 - 2	19.0	16.7	38	63	BB4	50	6.6	BF2	57	20	18.5	18.5	–	M6	4	30.0	0.60
25 x 5R x 3 - 4	24.0	21.9	38	63	BB4	50	6.6	BF1	45	12	10.0	–	33	M6	4	30.0	0.35
25 x 10R x 3 - 4	24.0	21.9	38	63	BB4	50	6.6	BF1	64	12	16.0	–	52	M6	4	30.0	0.44
25 x 25R x 3.5 - 2	24.0	21.4	48	73	BB4	60	6.6	BF2	70	25	22.5	22.5	–	M6	4	18.0	1.09
32 x 5R x 3.5 - 4	31.0	28.4	48	73	BB4	60	6.6	BF1	48	13	10.0	–	35	M6	4	30.0	0.54
32 x 10R x 3.969 - 5	31.0	27.9	48	73	BB4	60	6.6	BF1	77	13	16.0	–	64	M6	4	30.0	0.72
32 x 20R x 3.969 - 2	31.0	27.9	56	80	BB4	68	6.6	BF1	64	15	25.0	–	49	M6	4	30.0	1.02
32 x 32R x 3.969 - 2	31.0	27.9	56	80	BB4	68	6.6	BF2	88	20	34.0	34.0	–	M6	4	30.0	1.40
40 x 5R x 3.5 - 5	39.0	36.4	56	80	BB4	68	6.6	BF1	54	15	10.0	–	39	M8x1	5	30.0	0.71
40 x 10R x 6 - 4	38.0	33.8	63	95	BB4	78	9.0	BF1	70	15	16.0	–	55	M8x1	5	30.0	1.29
40 x 10R x 6 - 6	38.0	33.8	63	95	BB4	78	9.0	BF1	90	15	16.0	_	75	M8x1	5	30.0	1.59
40 x 20R x 6 - 3	38.0	33.8	63	95	BB4	78	9.0	BF1	88	15	25.0	–	73	M8x1	5	30.0	1.54
40 x 40R x 6 - 2	38.0	33.8	72	110	BB4	90	11.0	BF2	102	40	31.0	31.0	–	M8x1	5	19.0	3.59
50 x 5R x 3.5 - 5	49.0	46.4	68	98	BB4	82	9.0	BF1	54	15	10.0	–	39	M8x1	5	30.0	1.02
50 x 10R x 6 - 6	48.0	43.8	72	110	BB4	90	11.0	BF1	90	18	16.0	–	72	M8x1	5	30.0	2.02
50 x 16R x 6 - 6	48.0	43.8	72	110	BB4	90	11.0	BF1	128	18	25.0	–	110	M8x1	5	30.0	2.58
50 x 20R x 6.5 - 3	48.0	43.4	85	125	BB4	105	11.0	BF1	92	22	25.0	–	70	M8x1	5	30.0	3.40
50 x 40R x 6.5 - 2	48.0	43.4	85	125	BB4	105	11.0	BF1	109	22	45.0	–	87	M8x1	5	30.0	3.87
63 x 10R x 6 - 6	61.0	56.8	85	125	BB4	105	11.0	BF1	90	22	16.0	–	68	M8x1	5	30.0	2.62
63 x 20R x 6.5 - 3	61.0	56.4	95	140	BB4	118	14.0	BF1	92	22	25.0	–	70	M8x1	5	30.0	3.71
63 x 40R x 6.5 - 2	61.0	56.4	95	140	BB4	118	14.0	BF1	109	22	45.0	–	87	M8x1	5	30.0	4.21
80 x 10R x 6.5 - 6	78.0	73.3	105	150	BB4	125	14.0	BF1	95	22	16.0	–	73	M8x1	5	30.0	3.78
80 x 20R x 12.7 - 6	76.0	67.0	125	180	BB5	152	18.0	BF1	170	25	25.0	–	145	M8x1	5	22.5	11.00
Versions with left-hand lead																	
16 x 5L x 3 - 4	15.0	12.9	28	53	BB3	40	6.6	BF1	38	12	10.0	–	26	M6	4	45.0	0.24
20 x 5L x 3 - 4	19.0	16.9	33	58	BB4	45	6.6	BF1	40	12	10.0	–	28	M6	4	30.0	0.28
25 x 5L x 3 - 4	24.0	21.9	38	63	BB4	50	6.6	BF1	45	12	10.0	–	33	M6	4	30.0	0.35
32 x 5L x 3.5 - 4	31.0	28.4	48	73	BB4	60	6.6	BF1	48	13	10.0	–	35	M6	4	30.0	0.54
40 x 5L x 3.5 - 5	39.0	36.4	56	80	BB4	68	6.6	BF1	54	15	10.0	–	39	M8x1	5	30.0	0.71
40 x 10L x 6 - 4	38.0	33.8	63	95	BB4	78	9.0	BF1	70	15	16.0	–	55	M8x1	5	30.0	1.29

Single nut with flange FEM-E-B

Mounting dimensions similar to DIN 69051, Part 5
Flange type B

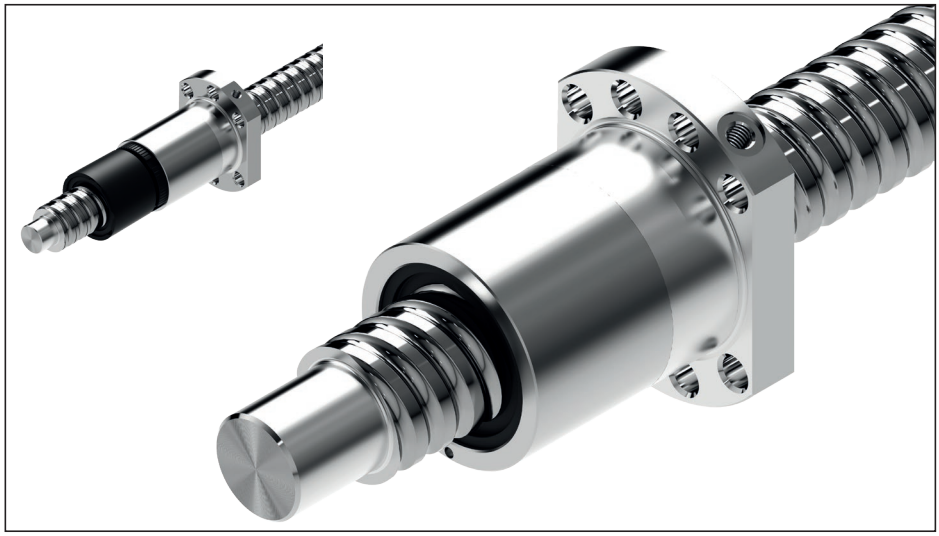

With seals
With left-hand version in some cases
Preload class: C0, C00, C1, C2, C3
Tolerance grade: T3[2], T5, T7, T9

Note: The front lube unit is only available for the right-hand version.

⚠ **When setting up applications, do not allow components to collide with the front lube unit.**

d_0 = nominal diameter
P = lead (R = right-hand, L = left-hand)
D_W = ball diameter
i = number of ball track turns

Ordering data:

BASA	20 x 5R x 3	FEM-E-B - 4	00	1	2	T7	R	82Z120	41Z120	1250	0	1

Category	Size d_0 x P x D_w - i	Part number	Load ratings[3] dyn. C (N)	stat. C_0 (N)	Linear speed[1] v_{max} (m/min)
A	**16 x 5R x 3 - 4**	R1502 010 63	14,800	16,100	30
A	**16 x 10R x 3 - 3**	R1502 040 83	11,500	12,300	60
A	**16 x 16R x 3 - 3**	R1502 060 63	11,200	12,000	96
A	**20 x 5R x 3 - 4**	R1502 110 83	17,200	21,500	30
A	**20 x 10R x 3 - 4**	R1502 140 63	16,900	21,300	60
A	**20 x 20R x 3.5 - 3**	R1502 170 63	16,000	18,800	120
A	**25 x 5R x 3 - 4**	R1502 210 83	19,100	27,200	30
A	**25 x 10R x 3 - 4**	R1502 240 83	18,800	27,000	60
A	**25 x 25R x 3.5 - 3**	R1502 280 63	17,600	23,300	150
A	**32 x 5R x 3.5 - 4**	R1502 310 83	25,900	40,000	23
A	**32 x 10R x 3.969 - 5**	R1502 340 84	38,000	58,300	47
A	**32 x 20R x 3.969 - 3**	R1502 370 63	23,600	33,700	94
A	**32 x 32R x 3.969 - 3**	R1502 390 63	23,400	34,000	150
A	**40 x 5R x 3.5 - 5**	R1502 410 84	34,900	64,100	19
A	**40 x 10R x 6 - 4**	R1502 440 83	60,000	86,400	38
B	**40 x 10R x 6 - 6**	R1502 440 84	86,500	132,200	38
C	**40 x 12R x 6 - 4**	R1502 450 63	59,900	86,200	45
C	**40 x 16R x 6 - 4**	R1502 460 63	59,600	85,900	60
A	**40 x 20R x 6 - 3**	R1502 470 83	45,500	62,800	75
B	**40 x 25R x 6 - 4**	R1502 480 83	56,900	85,800	93
B	**40 x 30R x 6 - 4**	R1502 4A0 83	56,300	85,100	112
A	**40 x 40R x 6 - 3**	R1502 490 63	44,400	62,300	150
B	**50 x 5R x 3.5 - 5**	R1502 510 84	38,400	81,300	15
B	**50 x 10R x 6 - 6**	R1502 540 84	95,600	166,500	30
C	**50 x 12R x 6 - 6**	R1502 550 64	95,500	166,400	36
C	**50 x 16R x 6 - 6**	R1502 560 64	95,300	166,000	48
B	**50 x 20R x 6.5 - 5**	R1502 570 84	90,800	149,700	60
B	**50 x 25R x 6.5 - 4**	R1502 580 84	71 800	149 700	75
B	**50 x 30R x 6.5 - 4**	R1502 5A0 83	71,300	118,800	90
B	**50 x 40R x 6.5 - 3**	R1502 590 63	55,800	85,900	120
B	**63 x 10R x 6 - 6**	R1502 640 84	106,600	214,300	24
B	**63 x 20R x 6.5 - 5**	R1502 670 84	100,700	190,300	48
B	**63 x 40R x 6.5 - 3**	R1502 690 63	64,100	114,100	95
C	**80 x 10R x 6.5 - 6**	R1502 740 84	130,100	291,700	19
C	**80 x 20R x 12.7 - 6**	R1502 770 94	315,200	534,200	30
C	**80 x 40R x 12.7 - 4**	R1502 790 94	216,600	367,600	60
Versions with left-hand lead					
B	**16 x 5L x 3 - 4**	R1552 010 63	14,800	16,100	30
B	**20 x 5L x 3 - 4**	R1552 110 83	17,200	21,500	30
B	**25 x 5L x 3 - 4**	R1552 210 83	19,100	27,200	30
B	**32 x 5L x 3.5 - 4**	R1552 310 63	25,900	40,000	23
B	**40 x 5L x 3.5 - 5**	R1552 410 64	34,900	64,100	19
B	**40 x 10L x 6 - 4**	R1552 440 63	60,000	86,400	38

1) See “Characteristic speed $d_0 \cdot n$” on page 133 and “Critical speed n_{cr}” on page 174
2) Tolerance grade T3 for sizes shown in table page 12
3) The load ratings are valid for tolerance grade T3 and T5 only.
For other tolerance grades, please take into account the correction factor f_{ac} on page 133.
4) Lube port machining: flat surface $L_3 \leq 15$ mm, countersink $L_3 > 15$ mm;
5) With left-hand lead the lube port position mirrors its position with right-hand lead!
6) The axial lube port S_x is always located on the pitch circle D_6 of the nut unit.

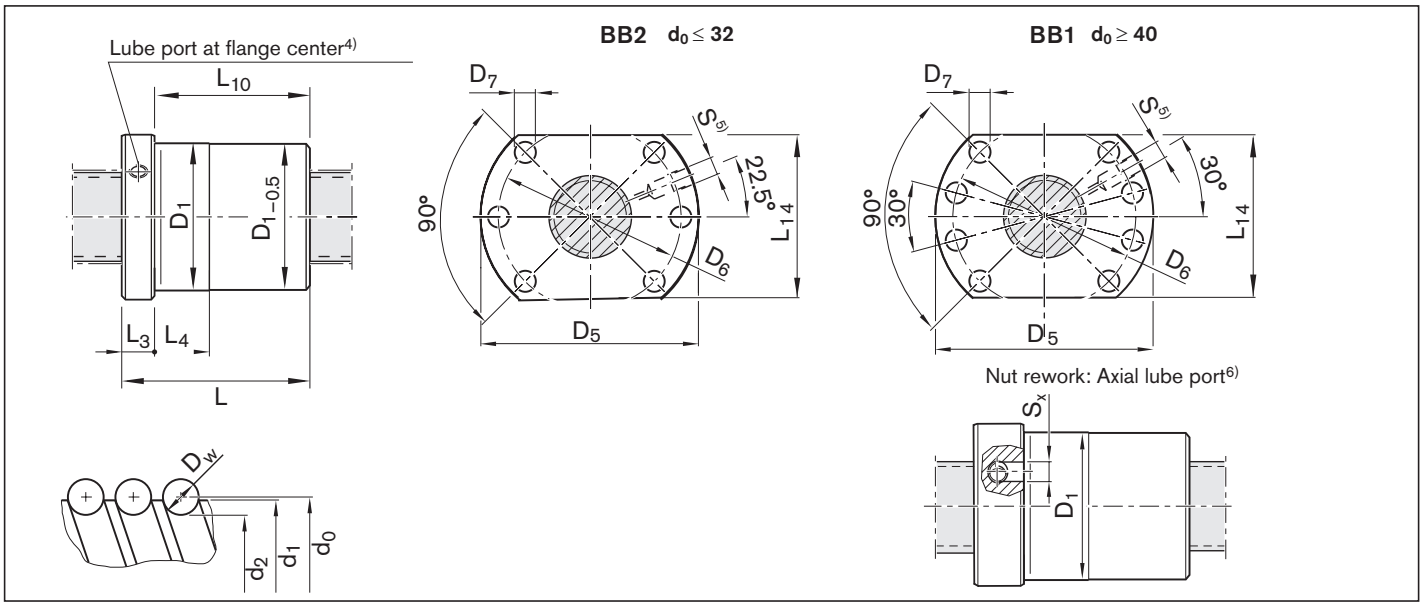

Size	(mm)														Mass
d_0 x P x D_w - i	d_1	d_2	D_1 g6	D_5	Hole pattern	D_6	D_7	L	L_3	L_4	L_{10}	L_{14}	S4)	S_x	m (kg)
16 x 5R x 3 - 4	15	12.9	28	48	BB2	38	5.5	38	12	10	26	40.0	M6	4	0.19
16 x 10R x 3 - 3	15	12.9	28	48	BB2	38	5.5	45	12	16	33	40.0	M6	4	0.21
16 x 16R x 3 - 3	15	12.9	28	48	BB2	38	5.5	61	12	20	49	40.0	M6	4	0.26
20 x 5R x 3 - 4	19	16.9	36	58	BB2	47	6.6	40	12	10	28	44.0	M6	4	0.31
20 x 10R x 3 - 4	19	16.9	36	58	BB2	47	6.6	60	12	16	48	44.0	M6	4	0.40
20 x 20R x 3.5 - 3	19	16.7	36	58	BB2	47	6.6	77	12	25	65	44.0	M6	4	0.49
25 x 5R x 3 - 4	24	21.9	40	62	BB2	51	6.6	45	12	10	33	48.0	M6	4	0.36
25 x 10R x 3 - 4	24	21.9	40	62	BB2	51	6.6	64	12	16	52	48.0	M6	4	0.47
25 x 25R x 3.5 - 3	24	21.4	40	62	BB2	51	6.6	95	12	30	83	48.0	M6	4	0.63
32 x 5R x 3.5 - 4	31	28.4	50	80	BB2	65	9.0	48	13	10	35	62.0	M6	4	0.62
32 x 10R x 3.969 - 5	31	27.9	50	80	BB2	65	9.0	77	13	16	64	62.0	M6	4	0.84
32 x 20R x 3.969 - 3	31	27.9	50	80	BB2	65	9.0	84	13	25	71	62.0	M6	4	0.90
32 x 32R x 3.969 - 3	31	27.9	50	80	BB2	65	9.0	120	13	40	107	62.0	M6	4	1.21
40 x 5R x 3.5 - 5	39	36.4	63	93	BB1	78	9.0	54	15	10	39	70.0	M8x1	5	1.03
40 x 10R x 6 - 4	38	33.8	63	93	BB1	78	9.0	70	15	16	55	70.0	M8x1	5	1.19
40 x 10R x 6 - 6	38	33.8	63	93	BB1	78	9.0	90	15	16	75	70.0	M8x1	5	1.49
40 x 12R x 6 - 4	38	33.8	63	93	BB1	78	9.0	75	15	25	60	70.0	M8x1	5	1.27
40 x 16R x 6 - 4	38	33.8	63	93	BB1	78	9.0	90	15	25	75	70.0	M8x1	5	1.51
40 x 20R x 6 - 3	38	33.8	63	93	BB1	78	9.0	88	15	25	73	70.0	M8x1	5	1.44
40 x 25R x 6 - 4	38	33.8	63	93	BB1	78	9.0	127	15	30	112	70.0	M8x1	5	1.91
40 x 30R x 6 - 4	38	33.8	63	93	BB1	78	9.0	145	15	35	130	70.0	M8x1	5	2.21
40 x 40R x 6 - 4	38	33.8	63	93	BB1	78	9.0	142	15	45	127	70.0	M8x1	5	2.16
50 x 5R x 3.5 - 5	49	46.4	75	110	BB1	93	11.0	54	15	10	39	85.0	M8x1	5	1.39
50 x 10R x 6 - 6	48	43.8	75	110	BB1	93	11.0	90	18	16	72	85.0	M8x1	5	2.14
50 x 12R x 6 - 6	48	43.8	75	110	BB1	93	11.0	105	18	25	87	85.0	M8x1	5	2.38
50 x 16R x 6 - 6	48	43.8	75	110	BB1	93	11.0	128	18	25	110	85.0	M8x1	5	2.75
50 x 20R x 6.5 - 5	48	43.4	75	110	BB1	93	11.0	132	18	25	114	85.0	M8x1	5	2.73
50 x 25R x 6.5 - 4	48	43.4	75	110	BB1	93	11.0	132	18	25	114	85.0	M8x1	–	2.78
50 x 30R x 6.5 - 4	48	43.4	75	110	BB1	93	11.0	151	18	35	133	85.0	M8x1	5	3.12
50 x 40R x 6.5 - 3	48	43.4	75	110	BB1	93	11.0	149	18	45	131	85.0	M8x1	5	3.04
63 x 10R x 6 - 6	61	56.8	90	125	BB1	108	11.0	90	22	16	68	95.0	M8x1	5	2.56
63 x 20R x 6.5 - 5	61	56.4	95	135	BB1	115	13.5	132	22	25	110	100.0	M8x1	5	4.51
63 x 40R x 6.5 - 3	61	56.4	95	135	BB1	115	13.5	149	22	45	127	100.0	M8x1	5	5.04
80 x 10R x 6.5 - 6	78	73.3	105	145	BB1	125	13.5	95	22	16	73	110.0	M8x1	5	3.40
80 x 20R x 12.7 - 6	76	67.0	125	165	BB1	145	13.5	170	25	25	145	130.0	M8x1	5	10.20
80 x 40R x 12.7 - 4	76	67.0	125	165	BB1	145	13.5	206	25	25	181	130.0	M8x1	5	11.60
Versions with left-hand lead															
16 x 5L x 3 - 4	15	12.9	28	48	BB2	38	5.5	38	12	10	26	40.0	M6	4	0.19
20 x 5L x 3 - 4	19	16.9	36	58	BB2	47	6.6	40	12	10	28	44.0	M6	4	0.31
25 x 5L x 3 - 4	24	21.9	40	62	BB2	51	6.6	45	12	10	33	48.0	M6	4	0.36
32 x 5L x 3.5 - 4	31	28.4	50	80	BB2	65	9.0	48	13	10	35	62.0	M6	4	0.62
40 x 5L x 3.5 - 5	39	36.4	63	93	BB1	78	9.0	54	15	10	39	70.0	M8x1	5	1.03
40 x 10L x 6 - 4	38	33.8	63	93	BB1	78	9.0	70	15	16	55	70.0	M8x1	5	1.19

Adjustable-preload single nut SEM-E-S

Rexroth connection dimensions

With seals
Left-hand version in some cases
Preload adjustable
Tolerance grade T3[2], T5, T7

Note: The front lube unit is only available for the right-hand version.

⚠ When setting up applications, do not allow components to collide with the front lube unit.

d_0 = nominal diameter
P = lead (R = right-hand, L = left-hand)
D_W = ball diameter
i = number of ball track turns

Ordering data:

BASA	20 x 5R x 3	SEM-E-S - 4	00	1	2	T7	R	82Z120	41Z120	1250	0	1

Category	Size	Part number	Load ratings[3]		Linear speed[1]	Centering diameter D_1 after adjustment	
			dyn. C	stat. C_0	v_{max}		
	d_0 x P x D_w - i		(N)	(N)	(m/min)	min. (mm)	max. (mm)
B	**16 x 5R x 3 - 4**	R1512 010 24	14,800	16,100	30	27.940	27.975
B	**16 x 10R x 3 - 3**	R1512 040 14	11,500	12,300	60	27.940	27.975
B	**16 x 16R x 3 - 2**	R1512 060 14	7,560	7,600	96	32.945	32.973
B	**20 x 5R x 3 - 4**	R1512 110 14	17,200	21,500	30	32.935	32.970
B	**20 x 20R x 3.5 - 2**	R1512 170 14	10,900	12,100	120	37.945	37.973
B	**25 x 5R x 3 - 4**	R1512 210 14	19,100	27,200	30	37.935	37.970
B	**25 x 10R x 3 - 4**	R1512 240 14	18,800	27,000	60	37.935	37.970
B	**25 x 25R x 3.5 - 2**	R1512 280 14	12,100	15,100	150	47.945	47.973
B	**32 x 5R x 3.5 - 4**	R1512 310 14	25,900	40,000	23	47.935	47.970
B	**32 x 10R x 3.969 - 5**	R1512 340 14	38,000	58,300	47	47.935	47.970
B	**32 x 20R x 3.969 - 2**	R1512 370 14	16,200	21,800	94	55.941	55.969
B	**32 x 32R x 3.969 - 2**	R1512 390 14	16,100	22,000	150	55.941	55.969
B	**40 x 5R x 3.5 - 5**	R1512 410 14	34,900	64,100	19	55.931	55.966
B	**40 x 10R x 6 - 4**	R1512 440 14	60,000	86,400	38	62.931	62.966
B	**40 x 20R x 6 - 3**	R1512 470 14	45,500	62,800	75	62.941	62.969
B	**40 x 40R x 6 - 2**	R1512 490 14	30,600	40,300	150	71.941	71.969
B	**50 x 5R x 3.5 - 5**	R1512 510 14	38,400	81,300	15	67.931	67.966
B	**50 x 10R x 6 - 6**	R1512 540 14	95,600	166,500	30	71.931	71.966
B	**50 x 20R x 6.5 - 3**	R1512 570 14	57,500	87,900	60	84.936	84.964
B	**50 x 40R x 6.5 - 2**	R1512 590 14	38,500	55,800	120	84.936	84.964
B	**63 x 10R x 6 - 6**	R1512 640 14	106,600	214,300	24	84.926	84.961
B	**63 x 20R x 6.5 - 3**	R1512 670 14	63,800	112,100	48	94.936	94.964
B	**63 x 40R x 6.5 - 2**	R1512 690 14	44,300	74,300	95	94.936	94.964
C	**80 x 10R x 6.5 - 6**	R1512 740 14	130,100	291,700	19	104.926	104.961
C	**80 x 20R x 12.7 - 6**	R1512 770 24	315,200	534,200	30	124.931	124.959
Versions with left-hand lead							
B	**16 x 5L x 3 - 4**	R1552 010 04	14,800	16,100	30	27.94	27.975
B	**20 x 5L x 3 - 4**	R1552 110 14	17,200	21,500	30	32.935	32.970
B	**25 x 5L x 3 - 4**	R1552 210 14	19,100	27,200	30	37.935	37.970
B	**32 x 5L x 3.5 - 4**	R1552 310 04	25,900	40,000	23	47.935	47.970
B	**40 x 5L x 3.5 - 5**	R1552 410 04	34,900	64,100	19	55.931	55.966
B	**40 x 10L x 6 - 4**	R1552 440 04	60,000	86,400	38	62.931	62.966

1) See “Characteristic speed $d_0 \cdot n$” on page 133 and “Critical speed n_{cr}” on page 174
2) Tolerance grade T3 for sizes shown in table page 12
3) The load ratings are valid for tolerance grade T3 and T5 only.
For other tolerance grades, please take into account the correction factor f_{ac} on page 133.

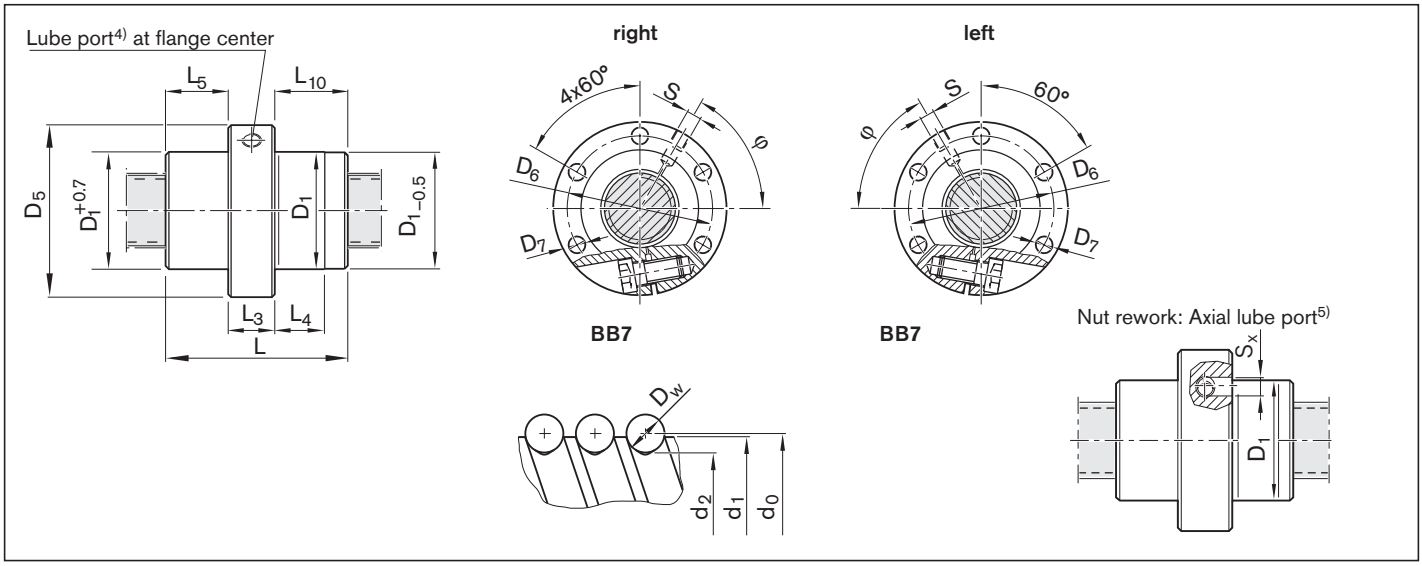

4) Lube port machining: flat surface $L_3 \leq 15$ mm, countersink $L_3 > 15$ mm. For size 8 x 2.5, a funnel-type lube nipple DIN 3405 is provided.
5) The axial lube port S_x is always located on the pitch circle D_6 of the nut unit.

Size	(mm)															Mass
	d_1	d_2	D_1	D_5	Hole pattern	D_6	D_7	L	L_3	L_4	L_5	L_{10}	S4)	S_x	φ	m
d_0 x P x D_w - i			f9												(°)	(kg)
16 x 5R x 3 - 4	15.0	12.9	28	53	BB7	40	6.6	38	15	10.0	11.5	11.5	M6	4	53	0.24
16 x 10R x 3 - 3	15.0	12.9	28	53	BB7	40	6.6	45	15	15.0	15.0	15.0	M6	4	180	0.25
16 x 16R x 3 - 2	15.0	12.9	33	58	BB7	45	6.6	45	15	15.0	15.0	15.0	M6	4	50	0.42
20 x 5R x 3 - 4	19.0	16.9	33	58	BB7	45	6.6	40	15	10.0	12.5	12.5	M6	4	56	0.31
20 x 20R x 3.5 - 2	19.0	16.7	38	63	BB7	50	6.6	57	20	18.5	18.5	18.5	M6	4	60	0.63
25 x 5R x 3 - 4	24.0	21.9	38	63	BB7	50	6.6	45	20	10.0	12.5	12.5	M6	4	60	0.44
25 x 10R x 3 - 4	24.0	21.9	38	63	BB7	50	6.6	64	20	16.0	22.0	22.0	M6	4	60	0.53
25 x 25R x 3.5 - 2	24.0	21.4	48	73	BB7	60	6.6	70	25	22.5	22.5	22.5	M6	4	48	1.13
32 x 5R x 3.5 - 4	31.0	28.4	48	73	BB7	60	6.6	48	20	10.0	14.0	14.0	M6	4	60	0.64
32 x 10R x 3.969 - 5	31.0	27.9	48	73	BB7	60	6.6	77	20	16.0	28.5	28.5	M6	4	168	0.87
32 x 20R x 3.969 - 2	31.0	27.9	56	80	BB7	68	6.6	64	20	22.0	22.0	22.0	M6	4	60	1.14
32 x 32R x 3.969 - 2	31.0	27.9	56	80	BB7	68	6.6	88	20	34.0	34.0	34.0	M6	4	60	1.44
40 x 5R x 3.5 - 5	39.0	36.4	56	80	BB7	68	6.6	54	20	10.0	17.0	17.0	M8x1	5	65	0.87
40 x 10R x 6 - 4	38.0	33.8	63	95	BB7	78	9.0	70	25	16.0	22.5	22.5	M8x1	5	57	1.53
40 x 20R x 6 - 3	38.0	33.8	63	95	BB7	78	9.0	88	25	25.0	31.5	31.5	M8x1	5	180	1.77
40 x 40R x 6 - 2	38.0	33.8	72	110	BB7	90	11.0	102	40	31.0	31.0	31.0	M8x1	5	49	3.77
50 x 5R x 3.5 - 5	49.0	46.4	68	98	BB7	82	9.0	54	25	10.0	14.5	14.5	M8x1	5	67	1.23
50 x 10R x 6 - 6	48.0	43.8	72	110	BB7	90	11.0	90	30	16.0	30.0	30.0	M8x1	5	61	2.44
50 x 20R x 6.5 - 3	48.0	43.3	85	125	BB7	105	11.0	92	30	25.0	31.0	31.0	M8x1	5	180	3.94
50 x 40R x 6.5 - 2	48.0	43.3	85	125	BB7	105	11.0	109	30	39.5	39.5	39.5	M8x1	5	60	4.42
63 x 10R x 6 - 6	61.0	56.8	85	125	BB7	105	11.0	90	30	16.0	30.0	30.0	M8x1	5	65	2.94
63 x 20R x 6.5 - 3	61.0	56.3	95	140	BB7	118	14.0	92	30	25.0	31.0	31.0	M8x1	5	190	4.45
63 x 40R x 6.5 - 2	61.0	56.3	95	140	BB7	118	14.0	109	30	39.5	39.5	39.5	M8x1	5	70	4.95
80 x 10R x 6.5 - 6	78.0	73.3	105	150	BB7	125	14.0	95	30	16.0	32.5	32.5	M8x1	5	67	4.20
80 x 20R x 12.7 - 6	76.0	67.0	125	180	BB7	152	18.0	170	50	25.0	60.0	60.0	M8x1	5	60	13.3
Versions with left-hand lead																
16 x 5L x 3 - 4	15.0	12.9	28	53	BB7	40	6.6	38	15	10.0	11.5	11.5	M6	4	53	0.24
20 x 5L x 3 - 4	19.0	16.9	33	58	BB7	45	6.6	40	15	10.0	12.5	12.5	M6	4	56	0.31
25 x 5L x 3 - 4	24.0	21.9	38	63	BB7	50	6.6	45	20	10.0	12.5	12.5	M6	4	60	0.44
32 x 5L x 3.5 - 4	31.0	28.4	48	73	BB7	60	6.6	48	20	10.0	14.0	14.0	M6	4	59	0.64
40 x 5L x 3.5 - 5	39.0	36.4	56	80	BB7	68	6.6	54	20	10.0	17.0	17.0	M8x1	5	65	0.87
40 x 10L x 6 - 4	38.0	33.8	63	95	BB7	78	9.0	70	25	16.0	22.5	22.5	M8x1	5	57	1.53

Adjustable-preload single nut SEM-E-C

Mounting dimensions similar to DIN 69051, Part 5 flange type C

With seals Adjustable preload
Tolerance grade T3[2], T5, T7

⚠ When setting up applications, do not allow components to collide with the front lube unit.

d_0 = nominal diameter
P = lead (R = right-hand)
D_W = ball diameter
i = number of ball track turns

Ordering data:

BASA	20 x 5R x 3	SEM-E-C - 4	00	1	2	T7	R	82Z120	41Z120	1250	0	1

Category	Size	Part number	Load ratings[3]		Linear speed[1]	Centering diameter D_1 after adjustment	
			dyn. C	stat. C_0	v_{max}		
	d_0 x P x D_w - i		(N)	(N)	(m/min)	min. (mm)	max. (mm)
B	**16 x 5R x 3 - 4**	R1512 010 55	14,800	16,100	30	27.940	27.975
B	**16 x 10R x 3 - 3**	R1512 040 75	11,500	12,300	60	27.940	27.975
B	**16 x 16R x 3 - 3**	R1512 060 55	11,200	12,000	96	27.950	27.978
B	**20 x 5R x 3 - 4**	R1512 110 75	17,200	21,500	30	35.935	35.970
B	**20 x 20R x 3.5 - 3**	R1512 170 55	16,000	18,800	120	35.945	35.973
B	**25 x 5R x 3 - 4**	R1512 210 75	19,100	27,200	30	39.935	39.970
B	**25 x 10R x 3 - 4**	R1512 240 75	18,800	27,000	60	39.935	39.970
B	**25 x 25R x 3.5 - 3**	R1512 280 55	17,600	23,300	150	39.945	39.973
B	**32 x 5R x 3.5 - 4**	R1512 310 75	25,900	40,000	23	49.935	49.970
B	**32 x 10R x 3.969 - 5**	R1512 340 75	38,000	58,300	47	49.935	49.970
B	**32 x 20R x 3.969 - 3**	R1512 370 55	23,600	33,700	94	49.945	49.973
B	**32 x 32R x 3.969 - 3**	R1512 390 55	23,400	34,000	150	49.945	49.973
B	**40 x 5R x 3.5 - 5**	R1512 410 75	34,900	64,100	19	62.931	62.966
B	**40 x 10R x 6 - 4**	R1512 440 75	60,000	86,400	38	62.931	62.966
C	**40 x 12R x 6 - 4**	R1512 450 55	59,900	86,200	45	62.931	62.966
B	**40 x 20R x 6 - 3**	R1512 470 75	45,500	62,800	75	62.941	62.969
B	**40 x 40R x 6 - 3**	R1512 490 55	44,400	62,300	150	62.941	62.969
B	**50 x 5R x 3.5 - 5**	R1512 510 75	38,400	81,300	15	74.931	74.966
B	**50 x 10R x 6 - 6**	R1512 540 75	95,600	166,500	30	74.931	74.966
C	**50 x 12R x 6 - 6**	R1512 550 55	95,500	166,400	36	74.931	74.966
B	**50 x 20R x 6.5 - 5**	R1512 570 76	90,800	149,700	60	74.941	74.969
B	**50 x 40R x 6.5 - 3**	R1512 590 55	55,800	85,900	120	74.941	74.969
B	**63 x 10R x 6 - 6**	R1512 640 75	106,600	214,300	24	89.926	89.961
B	**63 x 20R x 6.5 - 5**	R1512 670 76	100,700	190,300	48	94.936	94.964
B	**63 x 40R x 6.5 - 3**	R1512 690 55	64,100	114,100	95	94.936	94.964
C	**80 x 10R x 6.5 - 6**	R1512 740 75	130,100	291,700	19	104.926	104.961
C	**80 x 20R x 12.7 - 6**	R1512 770 56	315,200	534,200	30	124.931	124.959

1) See “Characteristic speed $d_0 \cdot n$” on page 133 and “Critical speed n_{cr}” on page 174
2) Tolerance grade T3 for sizes shown in table page 12
3) The load ratings are valid for tolerance grade T3 and T5 only.
For other tolerance grades, please take into account the correction factor f_{ac} on page 133.

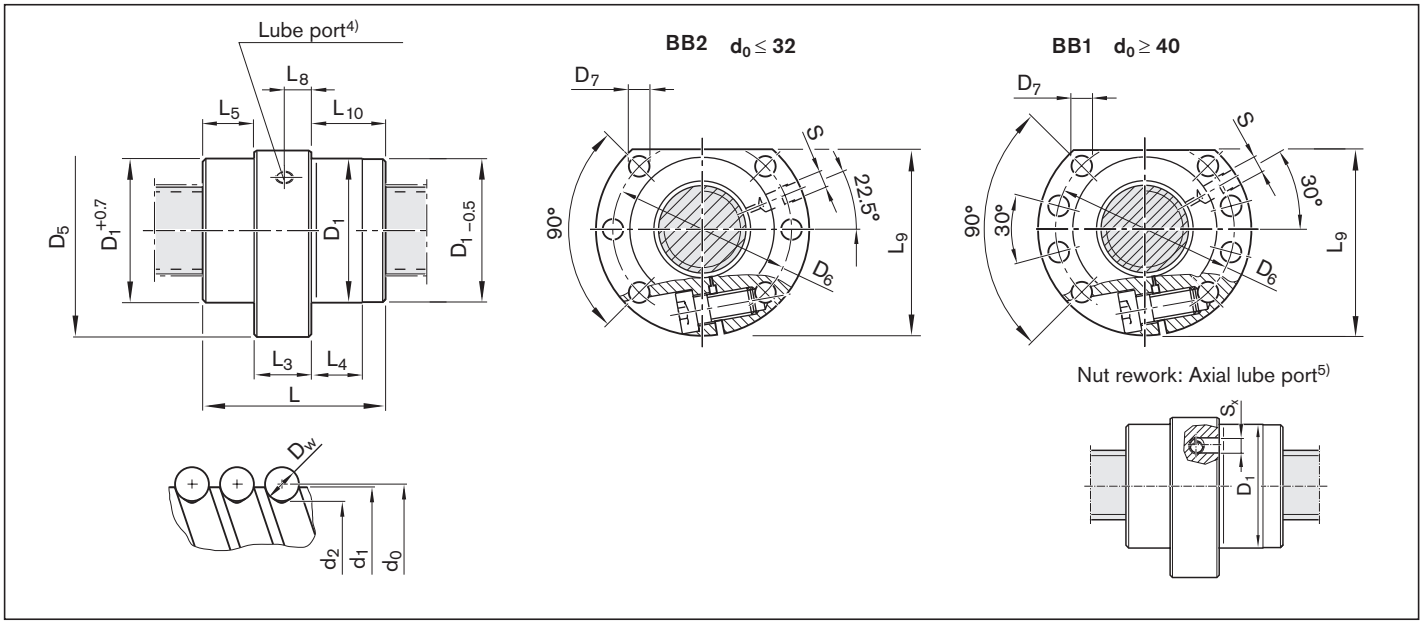

4) Lube port machining: flat surface $L_3 \leq 15$ mm, countersink $L_3 > 15$ mm
5) The axial lube port S_x is always located on the pitch circle D_6 of the nut unit.

Size	(mm)																Mass
	d_1	d_2	D_1	D_5	Hole pattern	D_6	D_7	L	L_3	L_4	L_5	L_8	L_9	L_{10}	S4)	S_x	m
d_0 x P x D_w - i			f9														(kg)
16 x 5R x 3 - 4	15.0	12.9	28	48	BB2	38	5.5	38	15	10	11.5	7.1	44.0	11.5	M6	4	0.20
16 x 10R x 3 - 3	15.0	12.9	28	48	BB2	38	5.5	45	15	15	15.0	11.0	44.0	15.0	M6	4	0.22
16 x 16R x 3 - 3	15.0	12.9	28	48	BB2	38	5.5	61	15	20	23.0	10.0	44.0	23.0	M6	4	0.29
20 x 5R x 3 - 4	19.0	16.9	36	58	BB2	47	6.6	40	15	10	12.5	7.1	51.0	12.5	M6	4	0.33
20 x 20R x 3.5 - 3	19.0	16.7	36	58	BB2	47	6.6	77	20	25	28.5	12.5	51.0	28.5	M6	4	0.56
25 x 5R x 3 - 4	24.0	21.9	40	62	BB2	51	6.6	45	20	10	12.5	9.5	55.0	12.5	M6	4	0.43
25 x 10R x 3 - 4	24.0	21.9	40	62	BB2	51	6.6	64	20	16	22.0	10.0	55.0	22.0	M6	4	0.54
25 x 25R x 3.5 - 3	24.0	21.4	40	62	BB2	51	6.6	95	25	30	35.0	14.0	55.0	35.0	M6	4	0.77
32 x 5R x 3.5 - 4	31.0	28.4	50	80	BB2	65	9.0	48	20	10	14.0	9.7	71.0	14.0	M6	4	0.74
32 x 10R x 3.969 - 5	31.0	27.9	50	80	BB2	65	9.0	77	20	16	28.5	12.5	71.0	28.5	M6	4	0.97
32 x 20R x 3.969 - 3	31.0	27.9	50	80	BB2	65	9.0	84	20	25	32.0	12.5	71.0	32.0	M6	4	1.04
32 x 32R x 3.969 - 3	31.0	27.9	50	80	BB2	65	9.0	120	20	40	50.0	12.5	71.0	50.0	M6	4	1.34
40 x 5R x 3.5 - 5	39.0	36.4	63	93	BB1	78	9.0	54	25	10	14.5	12.0	81.5	14.5	M8x1	5	1.25
40 x 10R x 6 - 4	38.0	33.8	63	93	BB1	78	9.0	70	25	16	22.5	11.8	81.5	22.5	M8x1	5	1.39
40 x 12R x 6 - 4	38.0	33.8	63	93	BB1	78	9.0	75	25	25	25.0	12.5	81.5	25.0	M8x1	5	1.47
40 x 20R x 6 - 3	38.0	33.8	63	93	BB1	78	9.0	88	25	25	31.5	16.5	81.5	31.5	M8x1	5	1.55
40 x 40R x 6 - 3	38.0	33.8	63	93	BB1	78	9.0	142	40	45	51.0	25.0	81.5	51.0	M8x1	5	2.69
50 x 5R x 3.5 - 5	49.0	46.4	75	110	BB1	93	11.0	54	25	10	14.5	12.0	97.5	14.5	M8x1	5	1.67
50 x 10R x 6 - 6	48.0	43.8	75	110	BB1	93	11.0	90	30	16	30.0	14.1	97.5	30.0	M8x1	5	2.46
50 x 12R x 6 - 6	48.0	43.8	75	110	BB1	93	11.0	105	30	25	37.5	15.0	97.5	37.5	M8x1	5	2.69
50 x 20R x 6.5 - 5	48.0	43.4	75	110	BB1	93	11.0	132	30	25	51.0	20.0	97.5	51.0	M8x1	5	3.08
50 x 40R x 6.5 - 3	48.0	43.4	75	110	BB1	93	11.0	149	30	45	59.5	18.0	97.5	59.5	M8x1	5	3.39
63 x 10R x 6 - 6	61.0	56.8	90	125	BB1	108	11.0	90	30	16	30.0	14.0	110.0	30.0	M8x1	5	2.83
63 x 20R x 6.5 - 5	61.0	56.4	95	135	BB1	115	13.5	132	30	25	51.0	20.0	117.5	51.0	M8x1	5	4.86
63 x 40R x 6.5 - 3	61.0	56.4	95	135	BB1	115	13.5	149	30	45	59.5	18.0	117.5	59.5	M8x1	5	5.36
80 x 10R x 6.5 - 6	78.0	73.3	105	145	BB1	125	13.5	95	30	16	32.5	14.0	127.5	32.5	M8x1	5	3.73
80 x 20R x 12.7 - 6	76.0	67.0	125	165	BB1	145	13.5	170	50	25	60.0	24.0	147.5	60.0	M8x1	5	13.50

Cylindrical single nut ZEM-E-S / ZEM-E-K[1] / ZEM-E-A[2]

Rexroth connection dimensions

With seals Left-hand version in some cases
Preload class: C0, C00, C1, C2, C3
Tolerance grade T3[4], T5, T7, T9

Ordering data:

BASA	20 x 5R x 3	ZEM-E-S - 5	00	1	2	T7	R	82Z120	41Z120	1250	0	1

d_0 = nominal diameter
P = lead (R = right-hand, L = left-hand)
D_W = ball diameter
i = number of ball track turns

Category	Size d_0 x P x D_w - i	Part number	Load ratings[5] dyn. C (N)	stat. C_0 (N)	Linear speed[3] v_{max} (m/min)
B	**16 x 5R x 3 - 4**	R1512 010 22	14,800	16,100	30
B	**16 x 5R x 3 - 4**	R1512 012 67[1]	14,800	16,100	30
B	**16 x 10R x 3 - 3**	R1512 040 12	11,500	12,300	60
B	**16 x 10R x 3 - 3**	R1512 042 08[1]	11,500	12,300	60
B	**16 x 10R x 3 - 3**	R1512 042 09[1]	11,500	12,300	60
B	**16 x 16R x 3 - 2**	R1512 060 12	7,560	7,600	96
B	**16 x 16R x 3 - 2**	R1512 062 10[1]	7,560	7,600	96
B	**16 x 16R x 3 - 3**	R1512 060 52	11,200	12,300	96
B	**16 x 16R x 3 - 3**	R1512 062 11[1]	11,200	12,300	96
B	**20 x 5R x 3 - 4**	R1512 112 43[1]	17,200	21,500	30
B	**20 x 5R x 3 - 5**	R1512 110 12	21,000	27,300	30
B	**20 x 10R x 3 - 4**	R1512 140 12	16,900	21,300	60
B	**20 x 20R x 3.5 - 2**	R1512 170 12	10,900	12,100	120
B	**20 x 20R x 3.5 - 3**	R1512 170 52	16,000	18,800	120
B	**20 x 20R x 3.5 - 3**	R1512 172 07[1]	16,000	18,800	120
B	**25 x 5R x 3 - 4**	R1512 210 12	19,100	27,200	30
B	**25 x 10R x 3 - 4**	R1512 240 12	18,800	27,000	60
B	**25 x 25R x 3.5 - 2**	R1512 280 12	12,100	15,100	150
B	**25 x 25R x 3.5 - 3**	R1512 280 52	17,600	23,300	150
B	**32 x 5R x 3.5 - 4**	R1512 310 12	25,900	40,000	23
B	**32 x 5R x 3.5 - 4**	R1512 310 52[2]	25,900	40,000	23
B	**32 x 10R x 3.969 - 5**	R1512 340 12	38,000	58,300	47
B	**32 x 10R x 3.969 - 5**	R1512 340 52[2]	38,000	58,300	47
B	**32 x 20R x 3.969 - 2**	R1512 370 12	16,200	21,800	94
B	**32 x 20R x 3.969 - 3**	R1512 370 52	23,600	33,700	94
B	**32 x 32R x 3.969 - 2**	R1512 390 12	16,100	22,000	150
B	**32 x 32R x 3.969 - 3**	R1512 390 52	23,400	34,000	150
B	**40 x 5R x 3.5 - 5**	R1512 410 12	34,900	64,100	19
B	**40 x 5R x 3.5 - 5**	R1512 412 21[1]	34,900	64,100	19
B	**40 x 10R x 6 - 4**	R1512 440 12	60,000	86,400	38
B	**40 x 10R x 6 - 6**	R1512 440 22	86,500	132,200	38
B	**40 x 20R x 6 - 3**	R1512 470 12	45,500	62,800	75
B	**40 x 40R x 6 - 2**	R1512 490 12	30,600	40,300	150
B	**40 x 40R x 6 - 3**	R1512 490 52	44,400	62,300	150
B	**50 x 5R x 3.5 - 5**	R1512 510 12	38,400	81,300	15
B	**50 x 10R x 6 - 6**	R1512 540 12	95,600	166,500	30
B	**50 x 20R x 6.5 - 3**	R1512 570 12	57,500	87,900	60
B	**63 x 10R x 6 - 6**	R1512 640 12	106,600	214,300	24
C	**80 x 10R x 6.5 - 6**	R1512 740 12	130,100	291,700	19
Versions with left-hand lead					
B	**16 x 5L x 3 - 4**	R1552 010 02	14,800	16,100	30
B	**20 x 5L x 3 - 5**	R1552 110 12	21,000	27,300	30
B	**20 x 5L x 3 - 4**	R1552 112 04[1]	17,200	21,500	30
B	**25 x 5L x 3 - 4**	R1552 210 12	19,100	27,200	30
B	**32 x 5L x 3.5 - 4**	R1552 310 02	25,900	40,000	23
B	**40 x 5L x 3.5 - 5**	R1552 410 02	34,900	64,100	19
B	**40 x 10L x 6 - 4**	R1552 440 02	60,000	86,400	38

1) ZEM-E-K / nuts for Rexroth modules and drive units
2) ZEM-E-A / nuts with mounting dimensions as per DIN 69051, Part 5
3) See “Characteristic speed $d_0 \cdot n$” on page 133 and “Critical speed n_{cr}” on page 174
4) Tolerance grade T3 for sizes shown in table page 12
5) The load ratings are valid for tolerance grade T3 and T5 only.
For other tolerance grades, please take into account the correction factor f_{ac} on page 133.

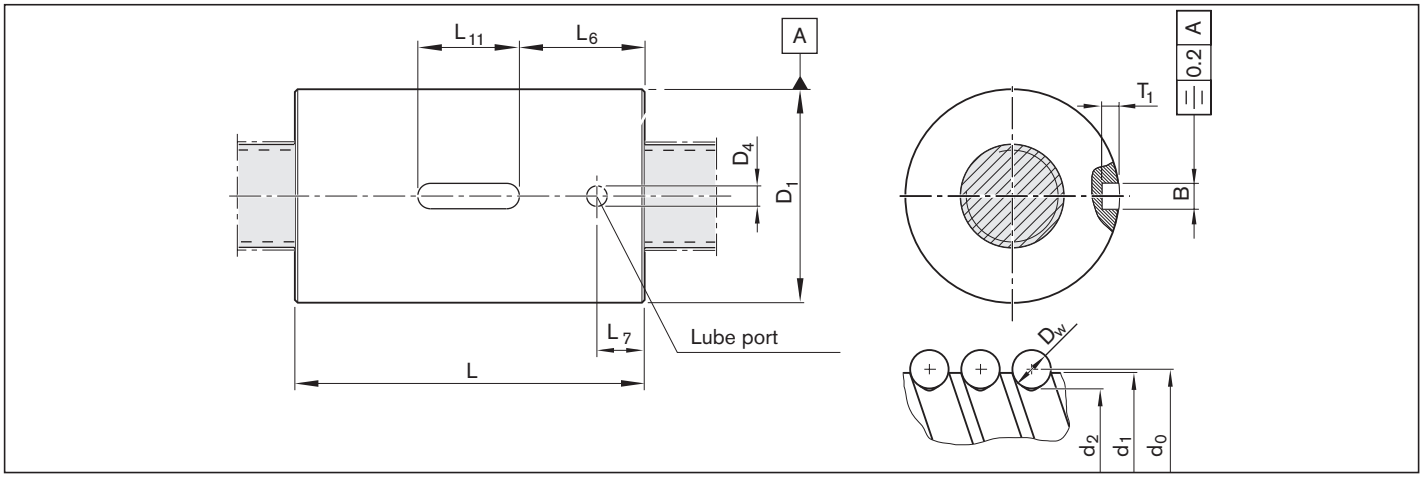

Size	(mm)										Mass
d_0 x P x D_w - i	d_1	d_2	D_1	D_4	L	L_6	L_7	L_{11}	B	T_1	m
			g6		±0.1			+0.2	P9	+0.1	(kg)
16 x 5R x 3 - 4	15.0	12.9	28	4	35	14.5	9.5	12	5	3.0	0.09
16 x 5R x 3 - 4	15.0	12.9	33	2	45	14.5	9.5	16	5	3.0	0.17
16 x 10R x 3 - 3	15.0	12.9	28	4	45	14.5	9.5	16	5	3.0	0.12
16 x 10R x 3 - 3	15.0	12.9	38	4	54	19.0	9.5	16	5	3.0	0.35
16 x 10R x 3 - 3	15.0	12.9	33	4	45	14.5	9.5	16	5	3.0	0.20
16 x 16R x 3 - 2	15.0	12.9	33	4	45	14.5	9.5	16	5	3.0	0.20
16 x 16R x 3 - 2	15.0	12.9	28	4	45	14.5	9.5	16	5	3.0	0.12
16 x 16R x 3 - 3	15.0	12.9	28	4	61	22.5	9.5	16	5	3.0	0.16
16 x 16R x 3 - 3	15.0	12.9	38	4	61	22.5	9.5	16	5	3.0	0.42
20 x 5R x 3 - 4	19.0	16.9	38	4	40	21.0	9.5	12	5	3.0	0.21
20 x 5R x 3 - 5	19.0	16.9	33	4	45	14.5	9.5	16	5	3.0	0.16
20 x 10R x 3 - 4	19.0	16.9	33	4	60	22.0	9.5	16	5	3.0	0.16
20 x 20R x 3.5 - 2	19.0	16.7	38	4	64	22.0	9.5	20	5	3.0	0.34
20 x 20R x 3.5 - 3	19.0	16.7	36	4	77	28.5	9.5	20	5	3.0	0.37
20 x 20R x 3.5 - 3	19.0	16.7	38	4	77	28.5	9.5	20	5	3.0	0.44
25 x 5R x 3 - 4	24.0	21.9	38	4	45	14.5	9.5	16	5	3.0	0.19
25 x 10R x 3 - 4	24.0	21.9	38	4	64	22.0	9.5	20	5	3.0	0.28
25 x 25R x 3.5 - 2	24.0	21.4	48	4	80	30.0	10.5	20	5	3.0	0.73
25 x 25R x 3.5 - 3	24.0	21.4	40	4	95	37.5	10.5	20	5	3.0	0.50
32 x 5R x 3.5 - 4	31.0	28.4	48	4	48	14.0	9.5	20	5	3.0	0.32
32 x 5R x 3.5 - 4	31.0	28.4	50	4	48	14.0	9.5	20	5	3.0	0.35
32 x 10R x 3.969 - 5	31.0	27.9	48	4	77	28.5	9.5	20	5	3.0	0.50
32 x 10R x 3.969 - 5	31.0	27.9	50	4	77	28.5	9.5	20	5	3.0	0.61
32 x 20R x 3.969 - 2	31.0	27.9	56	4	64	22.0	9.5	20	5	3.0	0.74
32 x 20R x 3.969 - 3	31.0	27.9	50	4	84	32.0	9.5	20	5	3.0	0.66
32 x 32R x 3.969 - 2	31.0	27.9	56	4	88	34.0	9.5	20	5	3.0	1.03
32 x 32R x 3.969 - 3	31.0	27.9	50	4	120	50.0	9.5	20	5	3.0	0.97
40 x 5R x 3.5 - 5	39.0	36.4	56	4	54	17.0	9.5	20	5	3.0	0.44
40 x 5R x 3.5 - 5	39.0	36.4	63	4	70	25.0	14.0	20	5	3.0	0.82
40 x 10R x 6 - 4	38.0	33.8	63	4	70	25.0	14.0	20	5	3.0	0.88
40 x 10R x 6 - 6	38.0	33.8	63	4	90	35.0	14.0	20	5	3.0	1.15
40 x 20R x 6 - 3	38.0	33.8	63	4	88	34.0	14.0	20	5	3.0	1.13
40 x 40R x 6 - 2	38.0	33.8	72	4	113	46.5	14.0	20	5	3.0	2.23
40 x 40R x 6 - 3	38.0	33.8	63	4	142	61.0	14.0	20	5	3.0	1.85
50 x 5R x 3.5 - 5	49.0	46.4	68	4	54	17.0	9.5	20	5	3.0	0.62
50 x 10R x 6 - 6	48.0	43.8	72	5	90	35.0	14.0	20	5	3.0	1.34
50 x 20R x 6.5 - 3	48.0	43.4	85	5	92	30.0	14.0	32	6	3.5	2.39
63 x 10R x 6 - 6	61.0	56.8	85	5	90	29.0	14.0	32	6	3.5	1.59
80 x 10R x 6.5 - 6	78.0	73.3	105	5	95	31.5	15.0	32	6	3.5	2.23
Versions with left-hand lead											
16 x 5L x 3 - 4	15.0	12.9	28	4	35	14.5	9.5	12	5	3.0	0.09
20 x 5L x 3 - 5	19.0	16.9	33	4	45	14.5	9.5	16	5	3.0	0.16
20 x 5L x 3 - 4	19.0	16.9	38	4	40	21.0	9.5	12	5	3.0	0.21
25 x 5L x 3 - 4	24.0	21.9	38	4	45	14.5	9.5	16	5	3.0	0.19
32 x 5L x 3.5 - 4	31.0	28.4	48	4	48	14.0	9.5	20	5	3.0	0.32
40 x 5L x 3.5 - 5	39.0	36.4	56	4	54	17.0	9.5	20	5	3.0	0.44
40 x 10L x 6 - 4	38.0	33.8	63	4	70	25.0	14.0	20	5	3.0	0.88

Screw-in nut ZEV-E-S

Rexroth connection dimensions

With low-friction seal,
preload class: C0, C00, C1
Tolerance grade T3[2], T5, T7, T9

Ordering data:

BASA	20 x 5R x 3	ZEV-E-S - 4	00	0	0	T7	R	81K120	41K120	550	0	0

d_0 = nominal diameter
P = lead (R = right-hand)
D_W = ball diameter
i = number of ball track turns

Category	Size d_0 x P x D_w - i	Part number	Load ratings[3] dyn. C (N)	 stat. C_0 (N)	Linear speed[1] v_{max} (m/min)
B	**16 x 5R x 3 - 3**	R2542 000 05	11,300	11,800	30.0
B	**16 x 10R x 3 - 3**	R2542 000 15	11,500	12,300	60.0
B	**20 x 5R x 3 - 4**	R2542 100 05	17,200	21,500	30.0
B	**25 x 5R x 3 - 7**	R2542 200 05	31,400	48,700	24.0
B	**25 x 10R x 3 - 5**	R2542 200 15	23,200	34,200	48.0
B	**32 x 5R x 3.5 - 5**	R2542 300 05	31,700	50,600	18.8
B	**32 x 10R x 3.969 - 5**	R2542 300 15	38,000	58,300	37.5

1) See “Characteristic speed $d_0 \cdot n$” on page 133 and “Critical speed n_{cr}” on page 174
2) Tolerance grade T3 for sizes shown in table page 12
3) The load ratings are valid for tolerance grade T3 and T5 only.
For other tolerance grades, please take into account the correction factor f_{ac} on page 133.

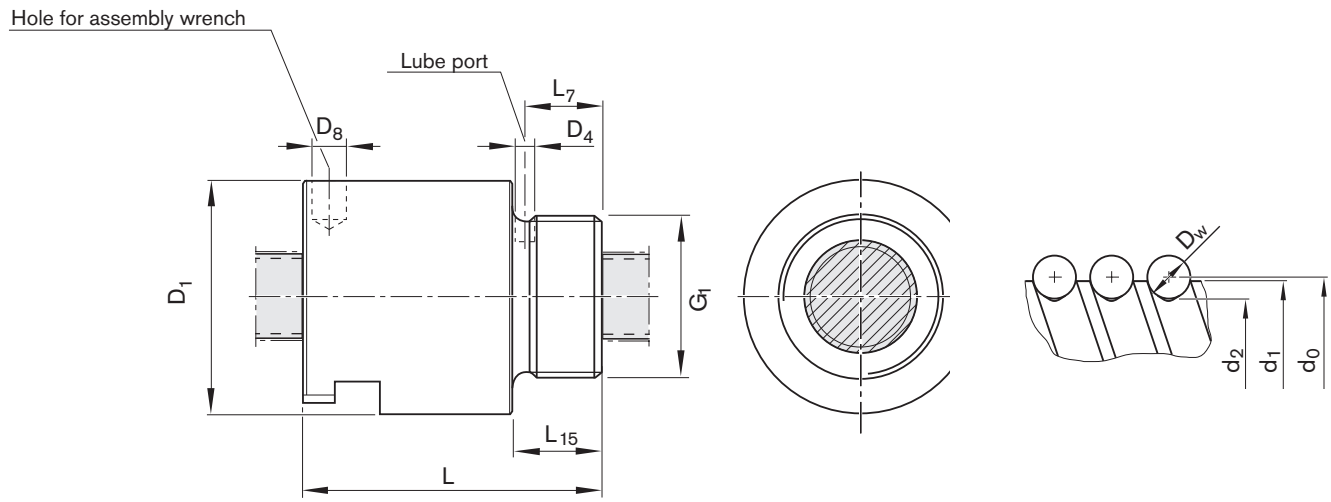

Size	(mm)									Mass
	d_1	d_2	D_1	D_4	D_8	G_1	L	L_7	L_{15}	m
d_0 x P x D_w - i			h10				±0.3			(kg)
16 x 5R x 3 - 3	15.0	12.9	32.5	2.7	4.2	M26 x 1.5	40	10.5	12	0.14
16 x 10R x 3 - 3	15.0	12.9	32.5	2.7	4.2	M26 x 1.5	54	10.5	12	0.21
20 x 5R x 3 - 4	19.0	16.9	38.0	2.7	8.0	M35 x 1.5	50	12.5	14	0.25
25 x 5R x 3 - 7	24.0	21.9	43.0	1.5	8.0	M40 x 1.5	60	17.5	19	0.36
25 x 10R x 3 - 5	24.0	21.9	43.0	2.0	8.0	M40 x 1.5	74	17.7	19	0.45
32 x 5R x 3.5 - 5	31.0	28.4	54.0	2.7	8.0	M48 x 1.5	69	17.5	19	0.58
32 x 10R x 3.969 - 5	31.0	27.9	54.0	2.7	8.0	M48 x 1.5	95	17.5	19	0.88

Double nut with flange FDM-E-S

Rexroth connection dimensions

With seals,
preload class: C4, C5
Tolerance grades T3[2)], T5, T7

Note: Supplied only as complete ball screw assembly.

⚠ When setting up applications, do not allow components to collide with the front lube unit.

d_0 = nominal diameter
P = lead (R = right-hand)
D_W = ball diameter
i = number of ball track turns

Ordering data:

BASA	20 x 5R x 3	FDM-E-S - 4	00	1	5	T7	R	82Z120	41Z120	1250	0	1

Category	Size d_0 x P x D_w - i	Part number	Load ratings[3)] dyn. C (N)	stat. C_0 (N)	Linear speed[1)] v_{max} (m/min)
C	**16 x 5R x 3 - 4**	R1502 010 23	14,800	16,100	30
C	**20 x 5R x 3 - 4**	R1502 110 33	17,200	21,500	30
C	**25 x 5R x 3 - 4**	R1502 210 33	19,100	27,200	30
C	**25 x 10R x 3 - 4**	R1502 240 33	18,800	27,000	60
C	**32 x 5R x 3.5 - 4**	R1502 310 33	25,900	40,000	23
C	**32 x 10R x 3.969 - 5**	R1502 340 33	38,000	58,300	47
C	**40 x 5R x 3.5 - 5**	R1502 410 33	34,900	64,100	19
C	**40 x 10R x 6 - 4**	R1502 440 33	60,000	86,400	38
C	**40 x 10R x 6 - 6**	R1502 440 34	86,500	132,200	38
C	**40 x 20R x 6 - 3**	R1502 470 33	45,500	62,800	75
C	**50 x 5R x 3.5 - 5**	R1502 510 33	38,400	81,300	15
C	**50 x 10R x 6 - 4**	R1502 540 33	66,500	109,000	30
C	**50 x 10R x 6 - 6**	R1502 540 34	95,600	166,500	30
C	**50 x 20R x 6.5 - 5**	R1502 570 34	90,800	149,700	60
C	**63 x 10R x 6 - 4**	R1502 640 33	74,200	140,500	24
C	**63 x 10R x 6 - 6**	R1502 640 34	106,600	214,300	24
C	**63 x 20R x 6.5 - 5**	R1502 670 34	100,700	190,300	48
C	**80 x 10R x 6.5 - 6**	R1502 740 34	130,100	291,700	19
C	**80 x 20R x 12.7 - 6**	R1502 770 04	315,200	534,200	30

1) See “Characteristic speed $d_0 \cdot n$” on page 133 and “Critical speed n_{cr}” on page 174
2) Tolerance grade T3 for sizes shown in table page 12
3) The load ratings are valid for tolerance grade T3 and T5 only.
For other tolerance grades, please take into account the correction factor f_{ac} on page 133.

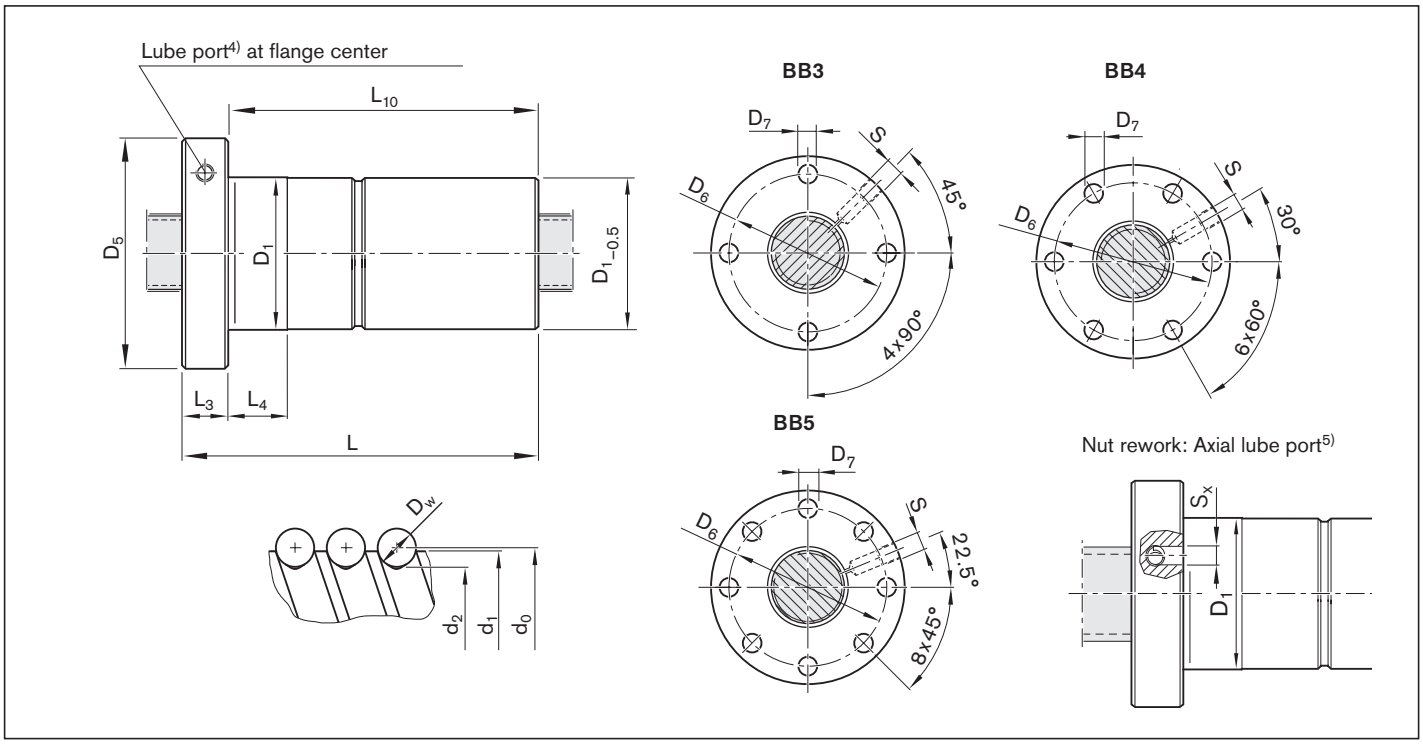

4) Lube port machining: flat surface $L_3 \leq 15$ mm, countersink $L_3 > 15$ mm
5) The axial lube port S_x is always located on the pitch circle D_6 of the nut unit.

Size	(mm)													Mass
	d_1	d_2	D_1	D_5	Hole pattern	D_6	D_7	L	L_3	L_4	L_{10}	S4)	S_x	m
d_0 x P x D_w - i			g6											(kg)
16 x 5R x 3 - 4	15.0	12.9	28	53	BB3	40	6.6	72	12	10	60	M6	4	0.33
20 x 5R x 3 - 4	19.0	16.9	33	58	BB4	45	6.6	82	12	10	70	M6	4	0.45
25 x 5R x 3 - 4	24.0	21.9	38	63	BB4	50	6.6	82	12	10	70	M6	4	0.53
25 x 10R x 3 - 4	24.0	21.9	38	63	BB4	50	6.6	120	12	16	108	M6	4	0.70
32 x 5R x 3.5 - 4	31.0	28.4	48	73	BB4	60	6.6	88	13	10	75	M6	4	0.84
32 x 10R x 3.969 - 5	31.0	27.9	48	73	BB4	60	6.6	146	13	16	133	M6	4	1.22
40 x 5R x 3.5 - 5	39.0	36.4	56	80	BB4	68	6.6	100	15	10	85	M8x1	5	1.13
40 x 10R x 6 - 4	38.0	33.8	63	95	BB4	78	9.0	140	15	16	125	M8x1	5	2.25
40 x 10R x 6 - 6	38.0	33.8	63	95	BB4	78	9.0	180	15	16	165	M8x1	5	2.83
40 x 20R x 6 - 3	38.0	33.8	63	95	BB4	78	9.0	175	15	25	160	M8x1	5	2.66
50 x 5R x 3.5 - 5	49.0	46.4	68	98	BB4	82	9.0	100	15	10	85	M8x1	5	1.60
50 x 10R x 6 - 4	48.0	43.8	72	110	BB4	90	11.0	140	18	16	122	M8x1	5	2.74
50 x 10R x 6 - 6	48.0	43.8	72	110	BB4	90	11.0	180	18	16	162	M8x1	5	3.39
50 x 20R x 6.5 - 5	48.0	43.4	85	125	BB4	105	11.0	255	22	25	233	M8x1	5	6.71
63 x 10R x 6 - 4	61.0	56.8	85	125	BB4	105	11.0	140	22	16	118	M8x1	5	3.53
63 x 10R x 6 - 6	61.0	56.8	85	125	BB4	105	11.0	180	22	16	158	M8x1	5	4.32
63 x 20R x 6.5 - 5	61.0	56.3	95	140	BB4	118	14.0	255	22	25	233	M8x1	5	8.65
80 x 10R x 6.5 - 6	78.0	73.3	105	150	BB4	125	14.0	190	22	16	168	M8x1	5	6.35
80 x 20R x 12.7 - 6	76.0	67.0	125	180	BB5	152	18.0	340	25	25	315	M8x1	5	20.20

Double nut with flange FDM-E-B

Mounting dimensions similar to DIN 69051, Part 5
Flange type B

With seals, preload class: C4, C5
Tolerance grades T3[2], T5, T7

Note: Supplied only as complete ball screw assembly.

⚠ **When setting up applications, do not allow components to collide with the front lube unit.**

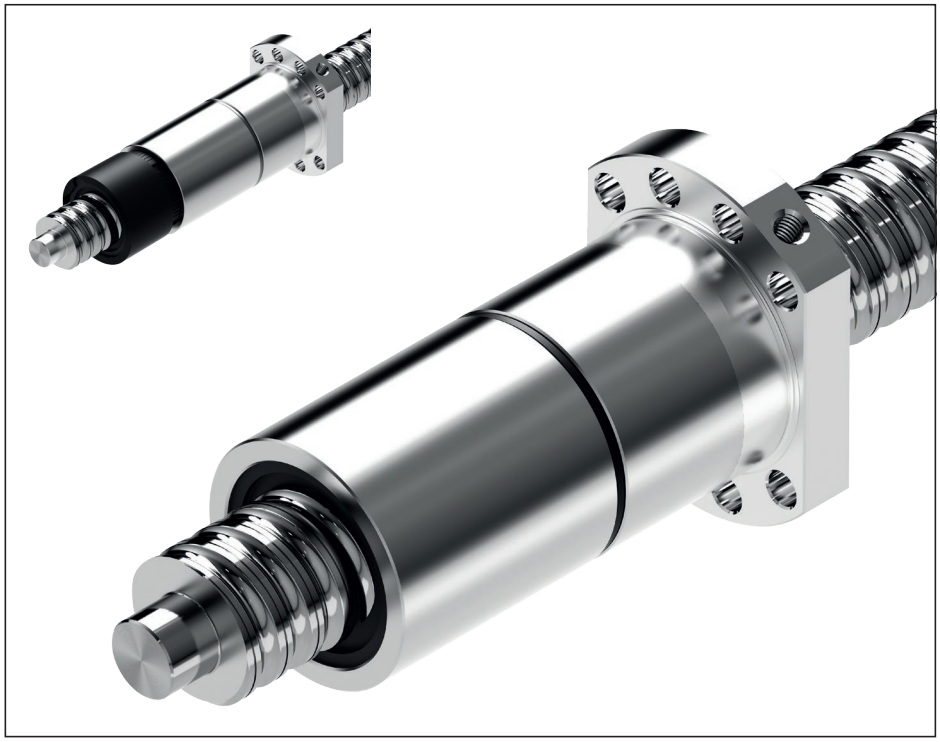

d_0 = nominal diameter
P = lead (R = right-hand)
D_W = ball diameter
i = number of ball track turns

Ordering data:

BASA	20 x 5R x 3	FDM-E-B - 4	00	1	5	T7	R	82Z120	41Z120	1250	0	1

Category	Size d_0 x P x D_w - i	Part number	Load ratings[3] dyn. C (N)	stat. C_0 (N)	Linear speed[1] v_{max} (m/min)
C	**16 x 5R x 3 - 4**	R1502 010 53	14,800	16,100	30
C	**20 x 5R x 3 - 4**	R1502 110 73	17,200	21,500	30
C	**25 x 5R x 3 - 4**	R1502 210 73	19,100	27,200	30
C	**25 x 10R x 3 - 4**	R1502 240 73	18,800	27,000	60
C	**32 x 5R x 3.5 - 4**	R1502 310 73	25,900	40,000	23
C	**32 x 10R x 3.969 - 5**	R1502 340 74	38,000	58,300	47
C	**40 x 5R x 3.5 - 5**	R1502 410 74	34,900	64,100	19
C	**40 x 10R x 6 - 4**	R1502 440 73	60,000	86,400	38
C	**40 x 10R x 6 - 6**	R1502 440 74	86,500	132,200	38
C	**40 x 20R x 6 - 3**	R1502 470 73	45,500	62,800	75
C	**50 x 5R x 3.5 - 5**	R1502 510 74	38,400	81,300	15
C	**50 x 10R x 6 - 4**	R1502 540 73	66,500	109,000	30
C	**50 x 10R x 6 - 6**	R1502 540 74	95,600	166,500	30
C	**50 x 20R x 6.5 - 5**	R1502 570 74	90,800	149,700	60
C	**63 x 10R x 6 - 4**	R1502 640 73	74,200	140,500	24
C	**63 x 10R x 6 - 6**	R1502 640 74	106,600	214,300	24
C	**63 x 20R x 6.5 - 5**	R1502 670 74	100,700	190,300	48
C	**80 x 10R x 6.5 - 6**	R1502 740 74	130,100	291,700	19
C	**80 x 20R x 12.7 - 6**	R1502 770 44	315,200	534,200	30

1) See "Characteristic speed $d_0 \cdot n$" on page 133 and "Critical speed n_{cr}" on page 174
2) Tolerance grade T3 for sizes shown in table page 12
3) The load ratings are valid for tolerance grade T3 and T5 only.
For other tolerance grades, please take into account the correction factor f_{ac} on page 133.

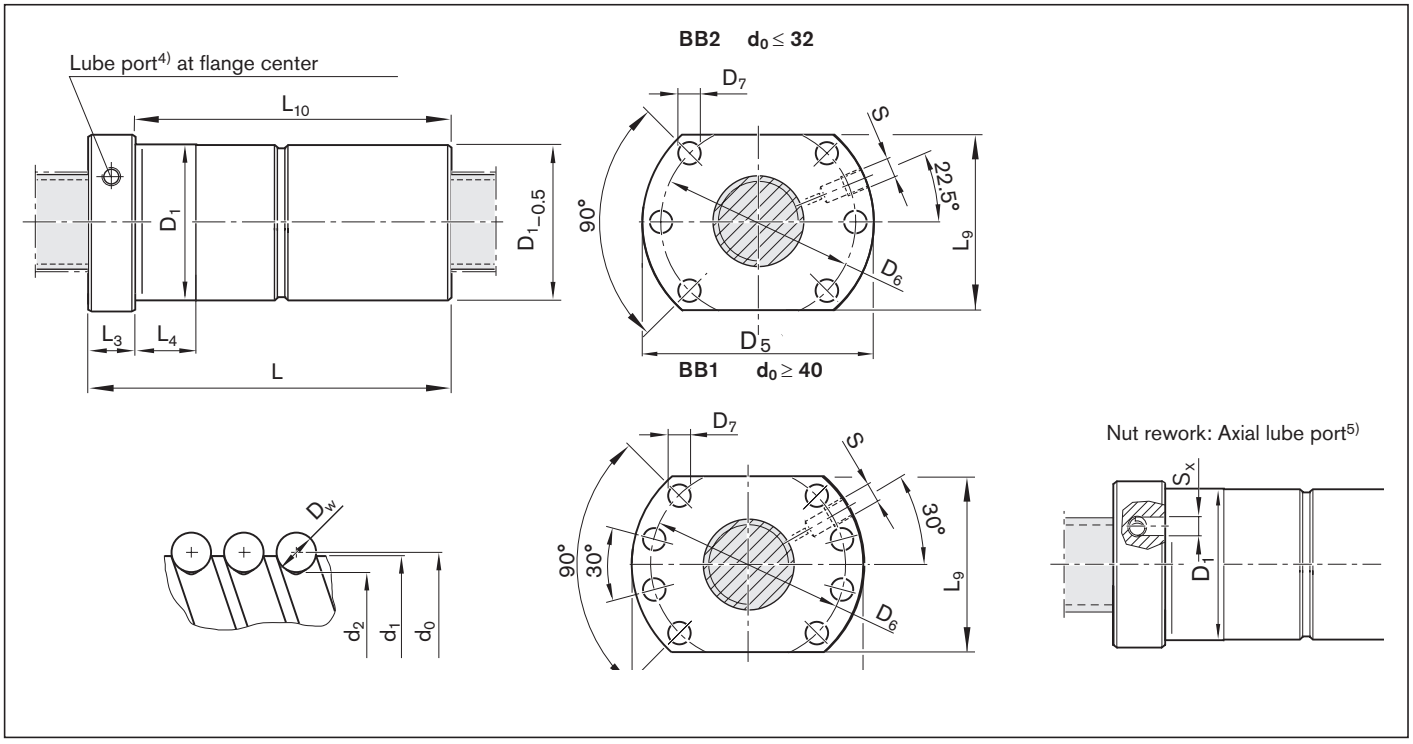

4) Lube port machining: flat surface $L_3 \leq 15$ mm, countersink $L_3 > 15$ mm
5) The axial lube port S_x is always located on the pitch circle D_6 of the nut unit.

Size	(mm)														Mass
	d_1	d_2	D_1	D_5	Hole pattern	D_6	D_7	L	L_3	L_4	L_{10}	L_{14}	S4)	S_x	m
d_0 x P x D_w - i			g6												(kg)
16 x 5R x 3 - 4	15.0	12.9	28	48	BB2	38	5.5	72	12	10	60	40.0	M6	4	0.29
20 x 5R x 3 - 4	19.0	16.9	36	58	BB2	47	6.6	82	12	10	70	44.0	M6	4	0.53
25 x 5R x 3 - 4	24.0	21.9	40	62	BB2	51	6.6	82	12	10	70	48.0	M6	4	0.57
25 x 10R x 3 - 4	24.0	21.9	40	62	BB2	51	6.6	120	12	16	108	48.0	M6	4	0.77
32 x 5R x 3.5 - 4	31.0	28.4	50	80	BB2	65	9.0	88	13	10	75	62.0	M6	4	0.96
32 x 10R x 3.969 - 5	31.0	27.9	50	80	BB2	65	9.0	146	13	16	133	62.0	M6	4	1.34
40 x 5R x 3.5 - 5	39.0	36.4	63	93	BB1	78	9.0	100	15	10	85	70.0	M8x1	5	1.68
40 x 10R x 6 - 4	38.0	33.8	63	93	BB1	78	9.0	140	15	16	125	70.0	M8x1	5	2.15
40 x 10R x 6 - 6	38.0	33.8	63	93	BB1	78	9.0	180	15	16	165	70.0	M8x1	5	2.73
40 x 20R x 6 - 3	38.0	33.8	63	93	BB1	78	9.0	175	15	25	160	70.0	M8x1	5	2.56
50 x 5R x 3.5 - 5	49.0	46.4	75	110	BB1	93	11.0	100	15	10	85	85.0	M8x1	5	2.25
50 x 10R x 6 - 4	48.0	43.8	75	110	BB1	93	11.0	140	18	16	122	85.0	M8x1	5	2.97
50 x 10R x 6 - 6	48.0	43.8	75	110	BB1	93	11.0	180	18	16	162	85.0	M8x1	5	3.73
50 x 20R x 6.5 - 5	48.0	43.3	75	110	BB1	93	11.0	255	18	25	237	85.0	M8x1	5	4.93
63 x 10R x 6 - 4	61.0	56.8	90	125	BB1	108	11.0	140	22	16	118	95.0	M8x1	5	4.00
63 x 10R x 6 - 6	61.0	56.8	90	125	BB1	108	11.0	180	22	16	158	95.0	M8x1	5	4.45
63 x 20R x 6.5 - 5	61.0	56.3	95	135	BB1	115	13.5	255	22	25	233	100.0	M8x1	5	8.21
80 x 10R x 6.5 - 6	78.0	73.3	105	145	BB1	125	13.5	190	22	16	168	110.0	M8x1	5	5.93
80 x 20R x 12.7 - 6	76.0	67.0	125	165	BB1	145	13.5	340	25	25	315	130.0	M8x1	5	19.40

Nuts, high-performance series

High-performance series

HP series ball screw assemblies are available with nominal diameters of 20 – 63 mm, and leads of 10 – 40 mm. The HP nut type is a single nut with flange which is available with a driven screw or as a driven nut.

FED-E-B

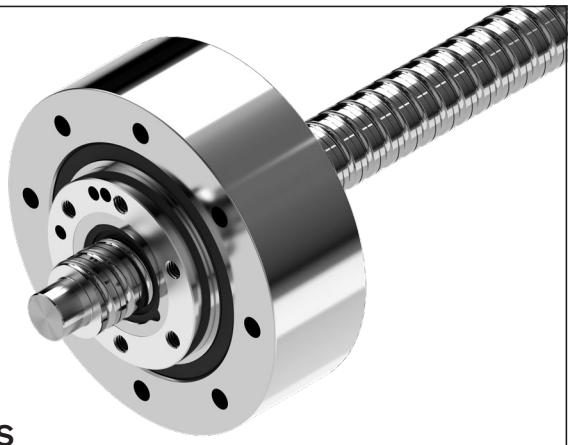

FAR-B-S

Preload classes

Option	Preload class	Definition
0	C0	Standard backlash
1	C00	Reduced backlash
2	C3	High preload (single nut)
3	C1	Moderate preload (single nut)
4	C4	High preload (double nut)
5	C5	Average preload (double nut)
6	C2	Average preload (single nut)

See nut versions for allocation of the preload classes

Driven single nut with flange FAR-B-S

Fundamental advantages of systems with driven nuts

Moment of inertia
In the case of long screws, the screw does not have to be rotated in the acceleration phase, only the nut.
The mass moment of inertia of the screw is not therefore critical. The moment of inertia of the nut is comparatively low and it is no longer dependent on the required stroke.

Dynamics
The intricate end bearing designs required for high dynamics, for example, fixed bearing on both ends with angular-contact ball bearings, are no longer necessary.

Screw extenders
Since the screw is stationary, relatively effort is needed to stretch the screw
- Increase in permissible axial loading (buckling load); not limited by end bearings
- Compensation of temperature influences
- Increase in overall rigidity

Design and manufacturing tolerances
The use of nuts with a high level of axial and radial runout precision minimizes the induced screw vibration. All functional components are supplied from a single source. In-house designs are no longer needed.

Liquid cooling
Improved cooling can easily be provided by using a hollow-bored screw:
cooling of the stationary screw can be provided with comparatively little effort. Controlled cooling virtually eliminates changes in length due to temperature fluctuations.

User benefits
- Economic efficiency provided by complete unit
- Adjustment to various speeds and loads is possible using the screw lead and the speed reducing belt
- Small installation space thanks to its compact construction
- Integral functionality and little installation work for the customer
- Low system costs
- High positioning accuracy
- For particularly demanding positioning tasks, it can be combined with the direct position measuring system that is integrated in the guide rail

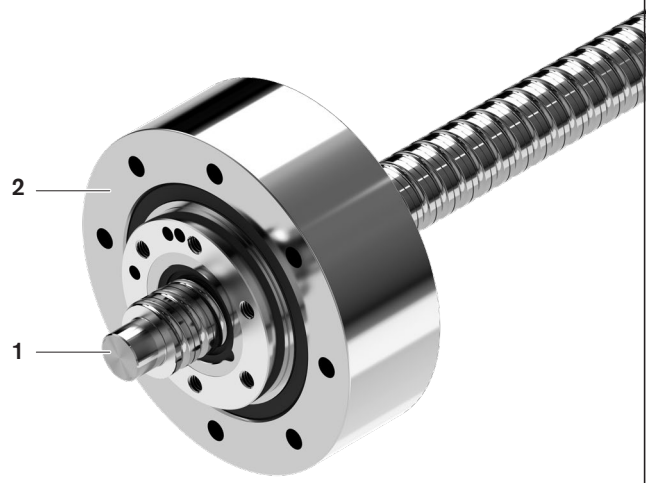

1 Ball screw assemblies (BASA) screw
2 Driven nut FAR

Single nut with flange FED-E-B

Mounting dimensions similar to DIN 69051, Part 5 flange type B

Nut for significantly increasing the dynamic and static load capacity
With standard seals
Preload class: C0, C00, C1, C2
Tolerance grade T3[1], T5, T7, T9

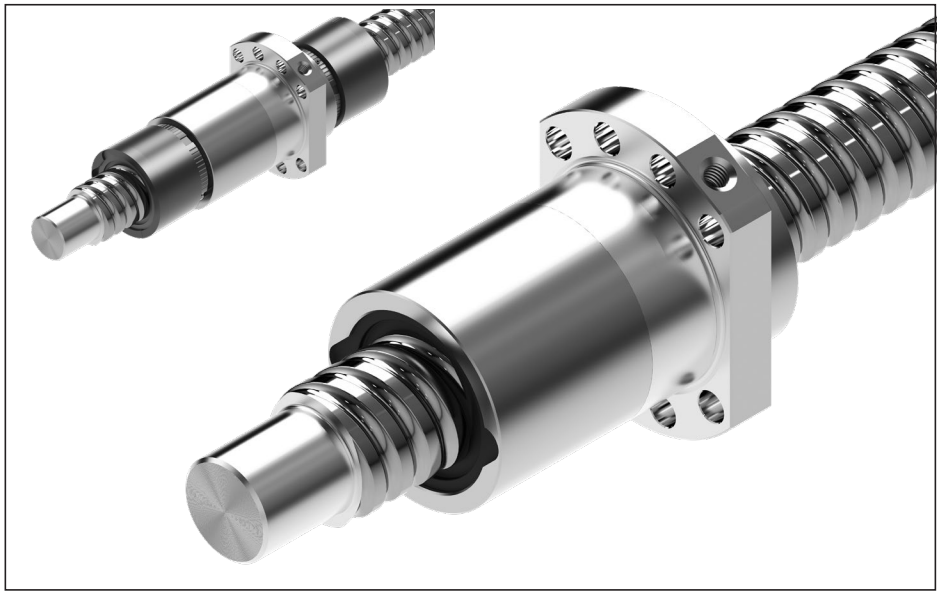

⚠ When setting up applications, do not allow components to collide with the front lube unit.

Ordering data:

BASA	40x20R x 6	FED-E-B - 8	00	1	2	T5	R	82Z300	41K300	1250	0	1

Category	Size	Part number	Load ratings[3]		Linear speed[2]
	d_0 x P x D_W - i		dyn. C (N)	stat. C_0 (N)	v_{max} (m/min)
B	**16 x 16 R x 3 - 6**	R1512 060 32	17 800	24 200	96
	20 x 20 R x 3.5 - 6	R1512 170 32	25 700	38 100	120
	25 x 25 R x 3.5 - 6	R1512 280 32	28 500	47 100	150
	32 x 20 R x 3.969 - 6	R1512 370 32	38 300	67 300	94
	32 x 32 R x 3.969 - 6	R1512 390 32	37 900	68 000	150
	40 x 20 R x 6 - 8	R1512 470 32	95 500	171 100	75
	40 x 25 R x 6 - 8	R1512 480 32	91 400	171 700	93
	40 x 30 R x 6 - 8	R1512 4A0 32	90 400	170 300	112
	40 x 40 R x 6 - 6	R1512 490 32	71 500	124 500	150
	50 x 20 R x 6.5 - 8	R1512 570 32	116 500	240 000	60
	50 x 25 R x 6.5 - 6	R1512 580 32	92 600	175 100	75
	50 x 30 R x 6.5 - 6	R1512 5A0 32	114 500	237 700	90
	50 x 40 R x 6.5 - 6	R1512 590 32	89 300	171 500	120
	63 x 20 R x 6.5 - 8	R1512 670 32	130 800	292 000	48
	63 x 40 R x 6.5 - 6	R1512 690 32	100 000	230 600	95

1) Tolerance grade T3 for sizes shown in table page 12
2) See “Characteristic speed $d_0 \cdot n$” on page 133 and “Critical speed n_{cr}” on page 174
3) The load ratings are valid for tolerance grade T3 and T5 only.
For other tolerance grades, please take into account the correction factor f_{ac} on page 133.

d_0 = nominal diameter
P = lead (R = right-hand)
D_W = ball diameter
i = number of ball track turns

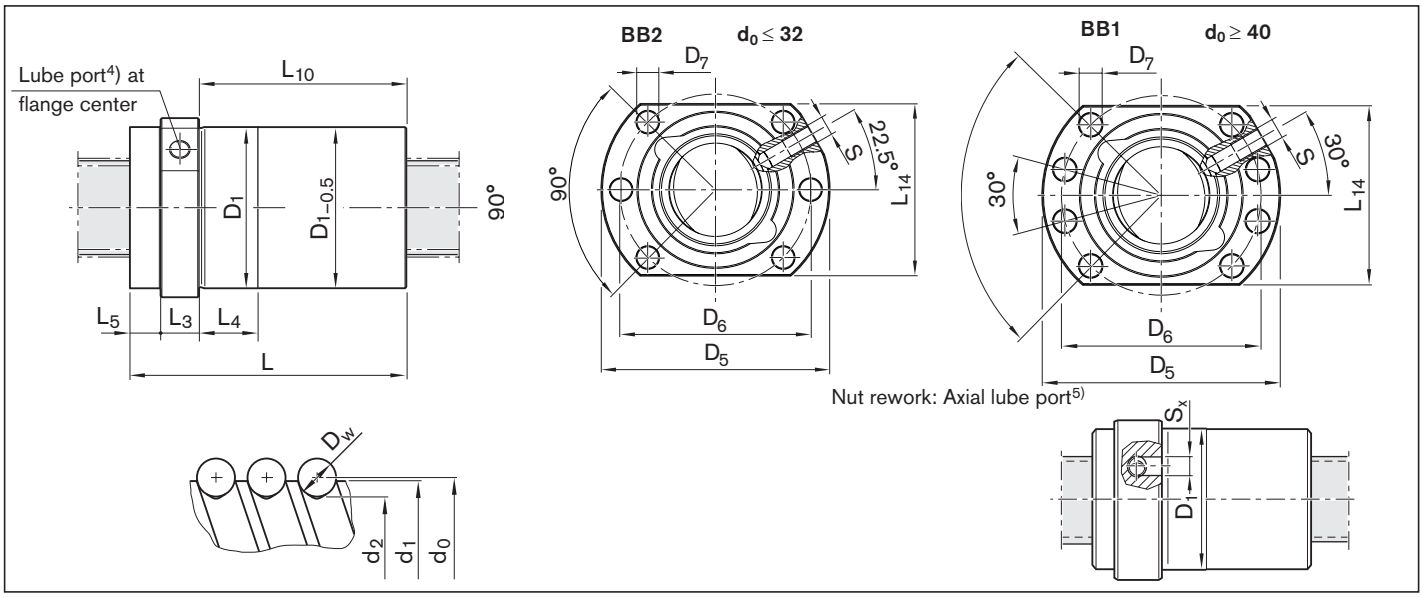

4) Lube port machining: flat surface $L_3 \leq 15$ mm, countersink $L_3 > 15$ mm
5) The axial lube port S_x is always located on the pitch circle D_6 of the nut unit.

Size	(mm)															Mass
	d_1	d_2	D_1	D_5	Hole pattern	D_6	D_7	L	L_3	L_4	L_5	L_{10}	L_{14}	S4)	S_x	m
d_0 x P x D_W - i			g6													(kg)
16 x 16 R x 3 - 6	15.0	12.9	28	48	BB2	38	5.5	61	12	20	6.0	43.0	40	M6	4	0.27
20 x 20 R x 3.5 - 6	19.0	16.7	36	58	BB2	47	6.6	77	12	25	8.0	57.0	44	M6	4	0.48
25 x 25 R x 3.5 - 6	24.0	21.4	40	62	BB2	51	6.6	95	12	30	9.0	74.0	48	M6	4	0.63
32 x 20 R x 3.969 - 6	31.0	27.9	50	80	BB2	65	9.0	84	13	25	11.0	60.0	62	M6	4	0.91
32 x 32 R x 3.969 - 6	31.0	27.9	50	80	BB2	65	9.0	120	13	40	12.0	95.0	62	M6	4	1.25
40 x 20 R x 6 - 8	38.0	33.8	63	93	BB1	78	9.0	108	15	25	13.0	80.0	70	M8x1	5	1.85
40 x 25 R x 6 - 8	38.0	33.8	63	93	BB1	78	9.0	127	15	30	11.5	100.5	70	M8x1	5	1.88
40 x 30 R x 6 - 8	38.0	33.8	63	93	BB1	78	9.0	145	15	35	11.5	118.5	70	M8x1	5	2.13
40 x 40 R x 6 - 6	38.0	33.8	63	93	BB1	78	9.0	142	15	45	11.5	115.5	70	M8x1	5	2.35
50 x 20 R x 6.5 - 8	48.0	43.3	75	110	BB1	93	11.0	112	18	25	13.0	81.0	85	M8x1	5	2.50
50 x 25 R x 6.5 - 6	48.0	43.3	75	110	BB1	93	11.0	107	18	25	13.5	75.5	85	M8x1	5	2.45
50 x 30 R x 6.5 - 6	48.0	43.3	75	110	BB1	93	11.0	151	18	35	15.0	118.0	85	M8x1	5	3.04
50 x 40 R x 6.5 - 6	48.0	43.3	75	110	BB1	93	11.0	149	18	45	15.0	116.0	85	M8x1	5	3.40
63 x 20 R x 6.5 - 8	61.0	56.3	95	135	BB1	115	13.5	112	22	25	11.0	79.0	100	M8x1	5	3.90
63 x 40 R x 6.5 - 6	61.0	56.3	95	135	BB1	115	13.5	149	22	45	12.0	115.0	100	M8x1	5	5.05

Driven single nut with flange FAR-B-S

Rexroth connection dimensions
With seals,
preload class: C1, C2, C3
Tolerance grade T3[2], T5, T7

The unit consists of:
nut, angular-contact thrust ball bearing and slotted nut NMZ

When in standstill, it can be relubricated with NLGI Class 2 grease via the stationary lube port of the bearing outer race

Note: Supplied only as complete ball screw assembly.

d_0 = nominal diameter
P = lead (R = right-hand)
D_W = ball diameter
i = number of ball track turns

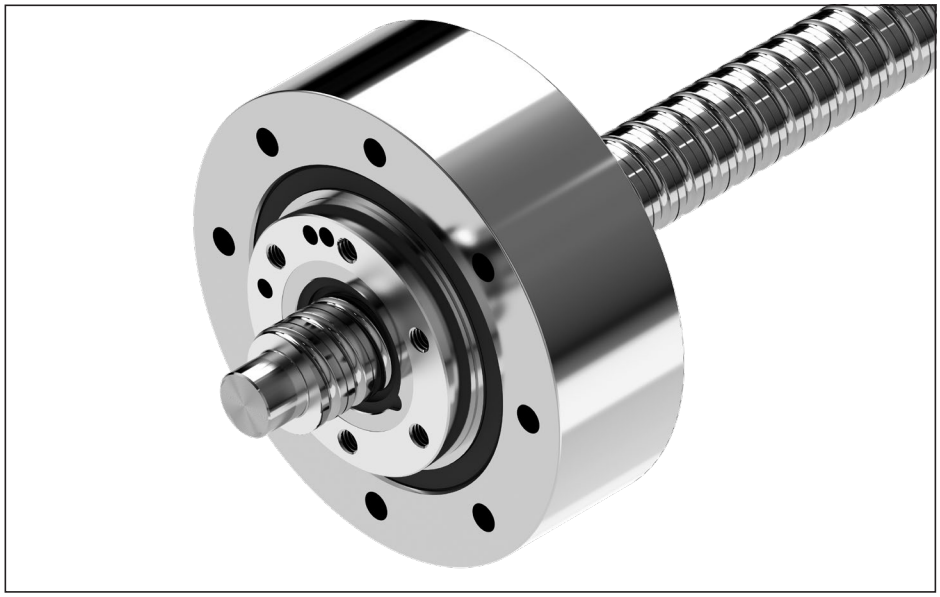

Ordering data:

BASA	40x20R x 6	FAR-B-S - 3	00	1	6	T5	R	51K300	51K300	1250	0	1

Cat-egory	FAR size	Size d_0 x P x D_w - i	Part number Module	Load ratings[1) 4)] dyn. C (N)	stat. C_0 (N)	Mass m_{FAR} (kg)	Mass moment of inertia J_{rotFAR} (kg · m² · 10^{-4})	Frictional torque Bearing M_{RL} (Nm)	Max. speed [3)] n_G (rpm)
C	32	32 x 10R x 3.969 - 5	R2532 301 01	38,000	58,300	5.8	22.5	1.0	3 000
		32 x 20R x 3.969 - 3	R2532 301 11	23,600	33,700	5.9	22.9		
		32 x 32R x 3.969 - 3	R2532 301 21	23,400	34,000	6.3	25.1		
C	40	40 x 10R x 6 - 5	R2532 401 01	73,400	109,300	7.3	42.7	1.2	2 800
		40 x 20R x 6 - 3	R2532 401 31	45,500	62,800	7.5	43.9		
		40 x 40R x 6 - 3	R2532 401 41	44,400	62,300	8.4	50.7		
C	50	50 x 10R x 6 - 6	R2532 501 01	95,600	166,500	8.3	67.6	1.4	2 700
		50 x 20R x 6.5 - 5	R2532 501 31	90,800	149,700	9.1	76.0		
		50 x 40R x 6.5 - 3	R2532 501 41	55,800	85,900	9.5	79.8		
C	63	63 x 10R x 6 - 6	R2532 601 01	106,600	214,300	12.8	139.0	2.3	2 300
		63 x 20R x 6.5 - 5	R2532 601 11	100,700	190,300	13.5	156.4		
		63 x 40R x 6.5 - 3	R2532 601 21	64,100	114,100	13.9	161.6		

1) Load ratings calculated according to DIN ISO 3408-5
2) Tolerance grade T3 for sizes shown in table page 12
3) Limited by the max. speed of the bearing. Bearing pre-tensioned without external operating load. Duty cycle 25%; max. steady-state temp. +50 °C
4) The load ratings are valid for tolerance grade T3 and T5 only.
For other tolerance grades, please take into account the correction factor f_{ac} on page 133.

FAR rigidity levels

FAR size	Size d_0 x P x D_w - i	Rigidity Screw R_S (Nm/µm)	Bearing R_{aL} (N/µm)	Overall rigidity of the nut unit (N/µm) Preload class C1 R_G	Preload class C2 R_G	Preload class C3 R_G
32	32 x 10R x 3.969 - 5	141	860	320	350	380
	32 x 20R x 3.969 - 3	141	860	220	250	280
	32 x 32R x 3.969 - 3	141	860	220	240	270
40	40 x 10R x 6 - 5	211	950	390	420	450
	40 x 20R x 6 - 3	211	950	270	300	330
	40 x 40R x 6 - 3	211	950	270	290	330
50	50 x 10R x 6 - 6	345	1,050	490	520	560
	50 x 20R x 6.5 - 5	340	1,050	450	480	530
	50 x 40R x 6.5 - 3	340	1,050	320	350	390
63	63 x 10R x 6 - 6	569	1,150	560	600	640
	63 x 20R x 6.5 - 5	563	1,150	520	560	610
	63 x 40R x 6.5 - 3	563	1,150	390	420	460

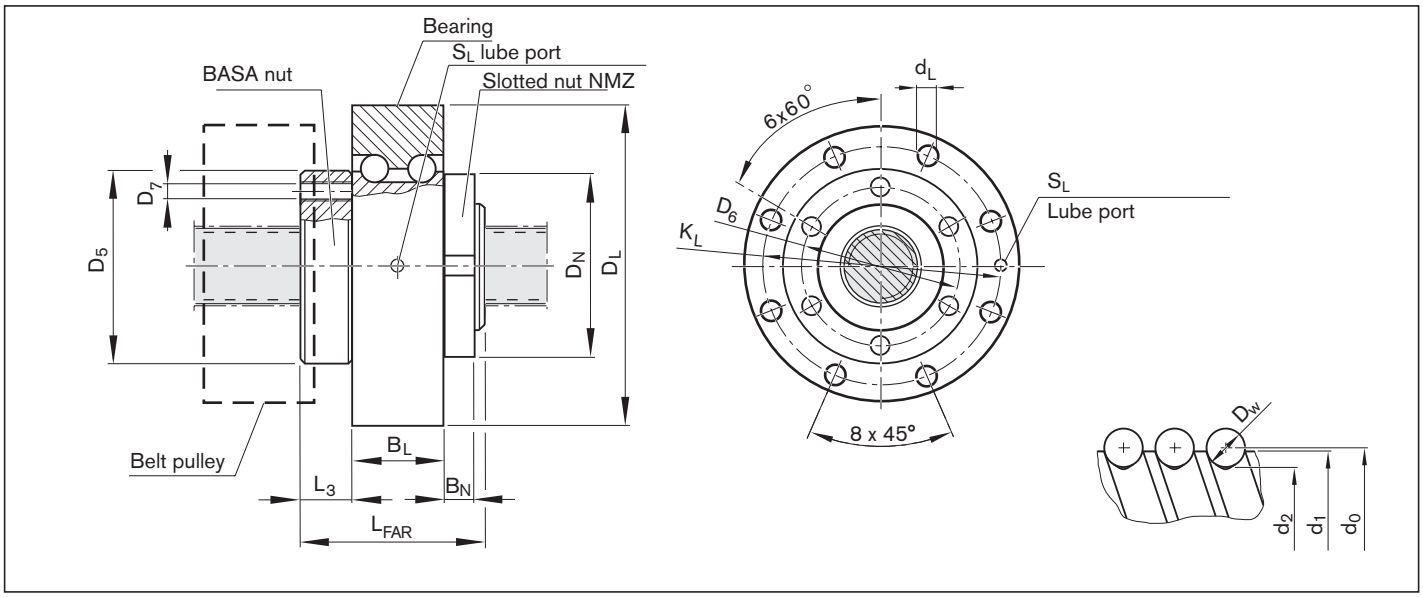

FAR size	Size	Dimensions (mm)													
	d_0 x P x D_w - i	d_1	d_2	L_{FAR}	D_5 h6	D_6	D_7	L_3	D_L −0.018	B_L	K_L	d_L +0.3/−0.1	S_L 5)	D_N	B_N
32	32 x 10R x 3.969 - 5	31	27.9	77	80	65	M8	11	145	49	120	8.8	M6	75	16
	32 x 20R x 3.969 - 3			84											
	32 x 32R x 3.969 - 3			120											
40	40 x 10R x 6 - 5	38	33.8	80	93	80	M8	12	155	49	130	8.8	M6	92	18
	40 x 20R x 6 - 3			88											
	40 x 40R x 6 - 3			142											
50	50 x 10R x 6 - 6	48	43.8	90	105	90	M8	13	165	49	140	8.8	M6	105	18
	50 x 20R x 6.5 - 5		43.3	132											
	50 x 40R x 6.5 - 3			149											
63	63 x 10R x 6 - 6	61	56.8	100	130	110	M10	20	190	60	165	11.0	M6	120	20
	63 x 20R x 6.5 - 5		56.3	132											
	63 x 40R x 6.5 - 3			149											

5) Condition on delivery: lube ports S_L sealed by setscrews (M6).
The desired lube port can be opened by removing the set screw.

Precision screw

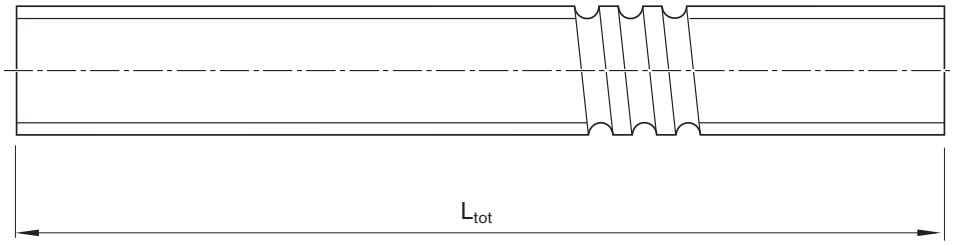

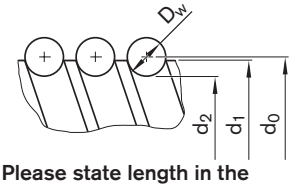

Please state length in the "Inquiry/Order Form"

L_{tot} = overall length

Size	Part number			(mm)		Moment of inertia	Maximum length (mm)		Mass
	Tolerance grade					J_s	Standard	on request	
d_0 x P x D_W	T5	T7	T9	d_1	d_2	(kg · cm²/m)			(kg/m)
6[1] x 1R x 0.8	–	–	–	6.0	5.3	0.02	–	–	0.19
6[1] x 2R x 0.8	–	–	–	6.0	5.3	0.02	–	–	0.19
8[1] x 1R x 0.8	–	–	–	8.0	7.3	0.04	–	–	0.36
8[1] x 2R x 1.2	–	–	–	8.0	7.0	0.04	–	–	0.36
8 x 2.5R x 1.588	R1531 235 00	R1531 237 00	R1531 239 00	7.5	6.3	0.04	1 500	2 500	0.30
8 x 5R x 1.588	R1531 265 00	R1531 267 00	R1531 269 00	7.5	6.3	0.04	1 500	2 500	0.30
12[1] x 2R x 1.2	–	–	–	11.7	10.7	0.13	–	–	0.79
12 x 5R x 2	R1531 465 10	R1531 467 10	R1531 469 10	11.4	9.9	0.11	1 500	2 500	0.75
12 x 10R x 2	R1531 495 00	R1531 497 00	R1531 499 00	11.4	9.9	0.11			0.74
16 x 5L x 3	R1551 015 00	R1551 017 00	R1551 019 00	15.0	12.9	0.31	1 500	3 500	1.24
16 x 5R x 3	R1511 015 00	R1511 017 00	R1511 019 00	15.0	12.9	0.31			1.24
16 x 10R x 3	R1511 045 00	R1511 047 00	R1511 049 00	15.0	12.9	0.31			1.23
16 x 16R x 3	R1511 065 10	R1511 067 10	R1511 069 10	15.0	12.9	0.34			1.29
20 x 5R x 3	R1511 115 00	R1511 117 00	R1511 119 00	19.0	16.9	0.84	1 500	3 500	2.03
20 x 5L x 3	R1551 115 00	R1551 117 00	R1551 119 00	19.0	16.9	0.84			2.03
20 x 10R x 3	R1511 145 00	R1511 147 00	R1511 149 00	19.0	16.9	0.84			2.03
20 x 20R x 3.5	R1511 175 10	R1511 177 10	R1511 179 10	19.0	16.7	0.81			1.99
20[1] x 40R x 3.5	–	–	–	19.0	16.4	0.86	–	–	2.06
25 x 5R x 3	R1511 215 00	R1511 217 00	R1511 219 00	24.0	21.9	2.22	2 500	5 500	3.31
25 x 5L x 3	R1551 215 00	R1551 217 00	R1551 219 00	24.0	21.9	2.22			3.31
25 x 10R x 3	R1511 245 00	R1511 247 00	R1511 249 00	24.0	21.9	2.39			3.43
25 x 25R x 3.5	R1511 285 10	R1511 287 10	R1511 289 10	24.0	21.4	2.15			3.25
32 x 5R x 3.5	R1511 315 00	R1511 317 00	R1511 319 00	31.0	28.4	6.05	2 500	5 500	5.45
32 x 5L x 3.5	R1551 315 00	R1551 317 00	R1551 319 00	31.0	28.4	6.05			5.45
32 x 10R x 3.969	R1511 345 10	R1511 347 10	R1511 349 10	31.0	27.9	6.40			5.60
32 x 20R x 3.969	R1511 375 10	R1511 377 10	R1511 379 10	31.0	27.9	6.39			5.60
32 x 32R x 3.969	R1511 395 10	R1511 397 10	R1511 399 10	31.0	27.9	6.17			5.50
32[1] x 64R x 3.969	–	–	–	31.0	27.9	6.04	–	–	5.44
40 x 5R x 3.5	R1511 415 00	R1511 417 00	R1511 419 00	39.0	36.4	15.64	4 500	5 500	8.78
40 x 5L x 3.5	R1551 415 00	R1551 417 00	R1551 419 00	39.0	36.4	15.64			8.78
40 x 10R x 6	R1511 445 00	R1511 447 00	R1511 449 00	38.0	33.8	13.55		7 500	8.15
40 x 10L x 6	R1551 445 00	R1551 447 00	R1551 449 00	38.0	33.8	13.55			8.15
40 x 12R x 6	R1511 455 00	R1511 457 00	R1511 459 00	38.0	33.8	13.97		5 000	8.27
40 x 16R x 6	R1511 465 00	R1511 467 00	R1511 469 00	38.0	33.8	12.90			7.95
40 x 20R x 6	R1511 475 00	R1511 477 00	R1511 479 00	38.0	33.8	13.52		7 500	8.14
40 x 25R x 6	R1511 485 00	R1511 487 00	R1511 489 00	38.0	33.8	13.51		5 000	8.67
40 x 30R x 6	R1511 4A5 00	R1511 4A7 00	R1511 4A9 00	38.0	33.8	13.71			8.67
40 x 40R x 6	R1511 495 10	R1511 497 10	R1511 499 10	38.0	33.8	13.42		7 500	8.11
50 x 5R x 3.5	R1511 515 00	R1511 517 00	R1511 519 00	49.0	46.4	40.03	4 500	5 500	14.05
50 x 10R x 6	R1511 545 00	R1511 547 00	R1511 549 00	48.0	43.8	35.71		7 500	13.25
50 x 12R x 6	R1511 555 00	R1511 557 00	R1511 559 00	48.0	43.8	36.58		5 000	13.41
50 x 16R x 6	R1511 565 00	R1511 567 00	R1511 569 00	48.0	43.8	34.37			13.00
50 x 20R x 6.5	R1511 575 10	R1511 577 10	R1511 579 10	48.0	43.3	34.50		7 500	13.01
50 x 25R x 6.5	R1511 585 00	R1511 587 00	R1511 589 00	48.0	43.3	32.40			12.58
50 x 30R x 6.5	R1511 5A5 00	R1511 5A7 00	R1511 5A9 00	48.0	43.3	36.64		5 000	13.42
50 x 40R x 6.5	R1511 595 10	R1511 597 10	R1511 599 10	48.0	43.3	34.34		7 500	12.98
63 x 10R x 6	R1511 645 00	R1511 647 00	R1511 649 00	61.0	56.8	95.82	4 500	7 500	21.72
63 x 20R x 6.5	R1511 675 10	R1511 677 10	R1511 679 10	61.0	56.3	93.29			21.42
63 x 40R x 6.5	R1511 695 10	R1511 697 10	R1511 699 10	61.0	56.3	93.08			21.40
80 x 10R x 6.5	R1511 745 00	R1511 747 00	R1511 749 00	78.0	73.3	256.86	4 500	7 500	35.58
80[1] x 20R x 12.7	–	–	–	76.0	67.0	211.51	–	–	32.16
80[1] x 40R x 12.7	–	–	–	76.0	67.0	243.51	–	–	33.88

1) Size not available as cut length

Overview of screw ends

Screw ends, forms for a left or right screw end

Basic version			with keyway		
00		page 59			
L1	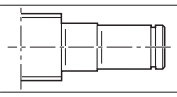	page 60			
			02	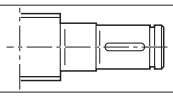	page 62
K1 K1A	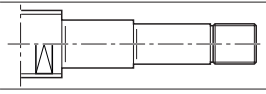	page 64			
			12 12A	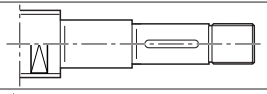	page 66
21	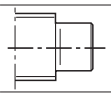	page 68	22	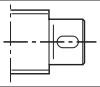	page 68
31	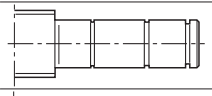	page 70			
41	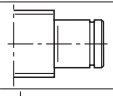	page 72			
51 51A	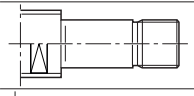	page 74	52 52A	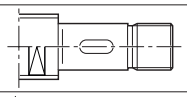	page 74
61		page 76	62	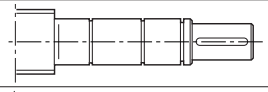	page 76
71	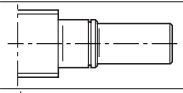	page 78	72	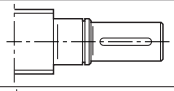	page 78
81 81A	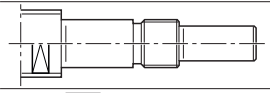	page 80	82 82A	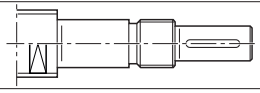	page 80
831/83 83A	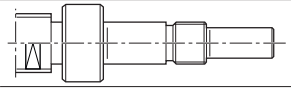	page 84	841/84 84A	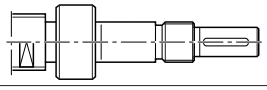	page 84
91 91A	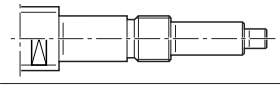	page 86	92 92A	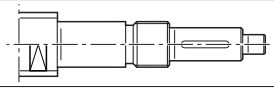	page 86
931/93 93A	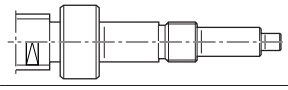	page 88	941/94 94A	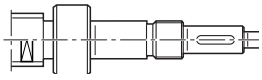	page 88
N1 N1A	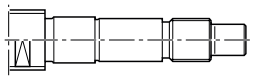	page 90	N2 N2A	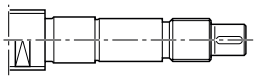	page 90

End machining of end-face

Z Centering hole DIN 332-D	S Hex socket	G Female thread
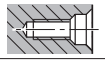	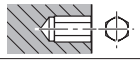	

Abbreviations

C	=	dynamic load rating
C_0	=	static load rating
d_0 x P	=	size
d_0	=	nominal diameter
F_{aB}	=	axial breaking load of slotted nut
G	=	female thread
n_G	=	limit speed (grease)
No.	=	part number
M_A	=	tightening torque of slotted nut
M_{AG}	=	tightening torque of set screw
M_{RL}	=	bearing friction torque with seal
M_p	=	maximum permissible drive torque (condition: no radial load at drive journal)
R_{fb}	=	rigidity (axial)
R_{kl}	=	rigidity against tilting
P	=	lead (R = right-hand)
S	=	hex socket
Z	=	centering hole

Form 00

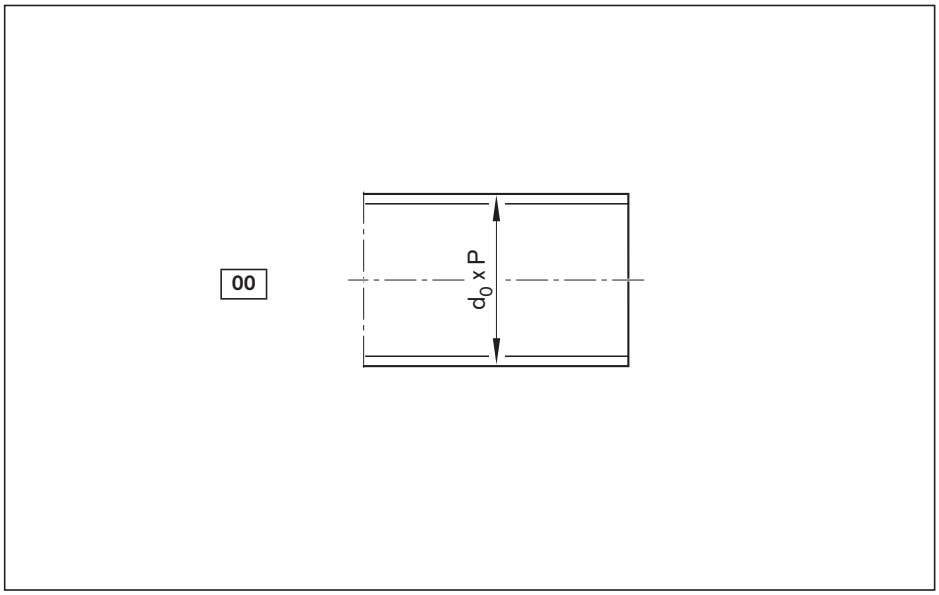

Option (machining of end face)	
K	None
Z	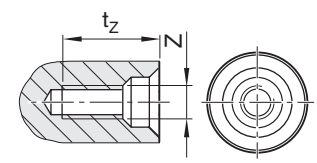
S	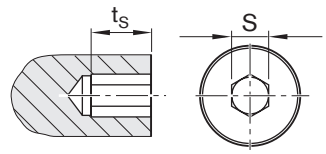
G	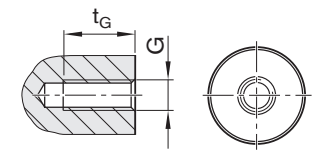

Ordering data:

BASA	20x5R x 3	SEM-E-S - 4	00	1	2	T7	R	00Z200	82Z120	1250	0	1

Form	Version	Size		(mm)					
				Centering hole		Hex socket		Thread	
		d_0	P	Z	t_Z	S	t_S	G	tg
00	**060**	6	1/2	–	–	–	–	–	–
	080	8	1/2/2.5/5	–	–	–	–	–	–
	120	12	2/5/10	M3	9	4	4	M4	6
	160	16	5/10/16	M4	10	5	5	M5	8
	200	20	5/10/20/40	M6	16	8	8	M6	9
	250	25	5/10/25	M8	19	10	10	M8	12
	320	32	5/10/20/32/64	M10	22	12	12	M10	15
	400	40	5/10/12/16/20/25/30/40	M12	28	14	14	M12	18
	500	50	5/10/12/16/20/25/30/40	M16	36	17	17	M16	24
	630	63	10/20/40	M20	42	17	17	M20	30
	800	80	10/20/40	M20	42	19	19	M24	36

Form L1

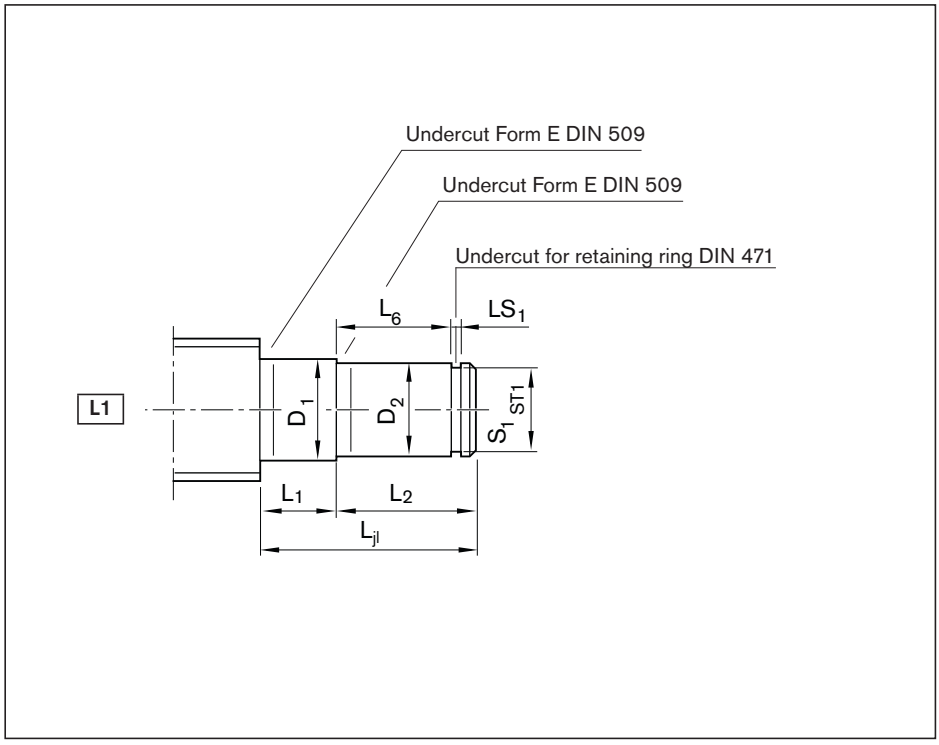

Option (machining of end face)	
K	None
Z	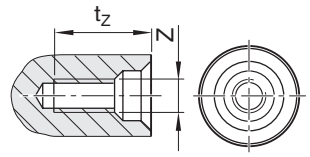
S	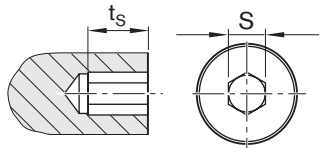
G	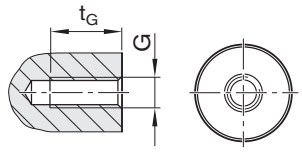

Ordering data:

BASA	20x5R x 3	SEM-E-S - 4	00	1	2	T7	R	02Z120	82Z120	1250	0	1

Form	Version[1]	(mm)										
		d_0	P	L_{ji}	D_1 h11	L_1	D_2 j6	L_2	L_6	S_1	S_{T1}	L_{S1} H13
L1	**050**	8	1/2/2.5/5	17	6.0	10	5	7	5	4.8	h10	0.70
	060	12	2/5/10	18	9.5	10	6	8	6	5.7	h10	0.80
	100	16	5/10/16	22	12.5	10	10	12	9	9.6	h10	1.10
	120	20	5/10/20/40	23	16.0	10	12	13	10	11.5	h11	1.10
	150	20	5/10/20/40	24	16.0	10	15	14	11	14.3	h11	1.10
	170	25	5/10/25	25	21.0	10	17	15	12	16.2	h11	1.10
	200	32	5/10/20/32/64	28	27.5	10	20	18	14	19.0	h11	1.30
	250	32	5/10/20/32/64	29	27.5	10	25	19	15	23.9	h12	1.30
	300	40	5/10/12/16/20/25/30/40	30	33.5	10	30	20	16	28.6	h12	1.60
	350	50	5/10/12/16/20/25/30/40	32	43.0	10	35	22	17	33.0	h12	1.60
	500	63	10/20/40	37	56.0	10	50	27	20	47.0	h12	2.15
	600	80	10/20/40	39	66.5	10	60	29	22	57.0	h12	2.15

1) The allocation of screw ends to the bearing assemblies is clearly defined by the version.

End bearings for screw ends Form L1

Deep-groove ball bearing as per DIN 625

Retaining ring as per DIN 471

Version[1)]	Centering hole		Hex socket		Thread		Deep-groove ball bearing		Retaining ring	
	Z	t_z	S	t_s	G	t_g	Abbreviation	Part number	Abbreviation	Part number
050	–	–	–	–	–	–	625.2RS	R3414 048 00	5x0.6	R3410 742 00
060	–	–	–	–	–	–	626.2RS	R3414 043 00	10x1	R3410 736 00
100	M3	9.0	4	4	M4	6	6200.2RS	R3414 049 00	10x1	R3410 745 00
120	M4	10.0	4	4	M5	8	6201.2RS	R3414 042 00	12x1	R3410 712 00
150	M5	12.5	4	4	M6	9	6202.2RS	R3414 074 00	15x1	R3410 748 00
170	M6	16.0	5	5	M6	9	6203.2RS	R3414 050 00	17x1	R3410 749 00
200	M6	16.0	5	5	M8	12	6204.2RS	R3414 038 00	20x1.2	R3410 735 00
250	M10	22.0	8	8	M10	15	6205.2RS	R3414 063 00	25x1.2	R3410 750 00
300	M10	22.0	10	10	M12	18	6206.2RS	R3414 051 00	30x1.5	R3410 724 00
350	M12	28.0	12	12	M12	18	6207.2RS	R3414 075 00	35x1.5	R3410 725 00
500	M16	36.0	19	19	M20	30	6210.2RS	R3414 077 00	50x2	R3410 727 00
600	M20	42.0	19	19	M24	36	6212.2RS	R3414 078 00	60x2	R3410 764 00

Form 02

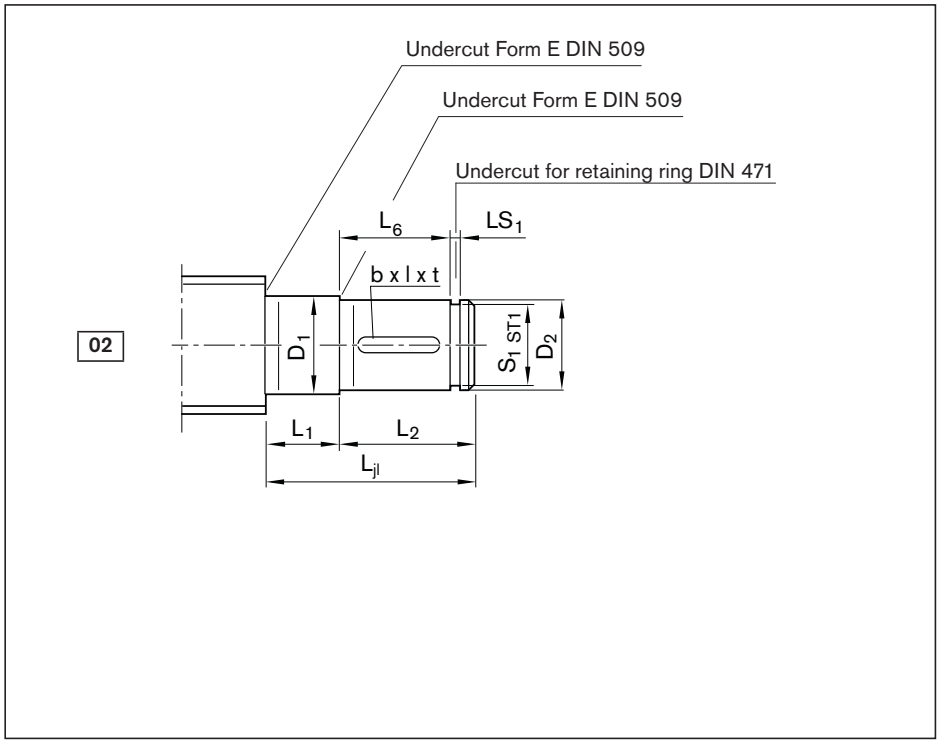

Option (machining of end face)	
K	None
Z	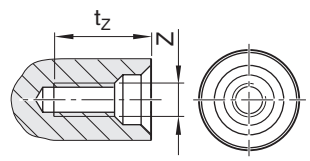
S	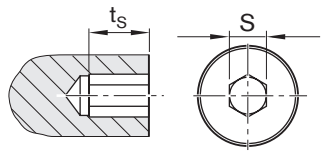
G	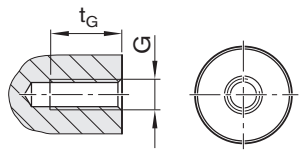

Ordering data:

BASA	20x5R x 3	SEM-E-S - 4	00	1	2	T7	R	02Z120	82Z120	1250	0	1

Form	Version[1]	Size		(mm)											
													Keyway as per DIN 6885		
		d_0	P	L_{jl}	D_1 j6	L_1	D_2 h7	L_2	L_6	S_1	ST1	LS_1 H13	b P9	l	t
02	**100**	16	5/10/16	32	10	9	8	23	20	7.6	h10	0.90	2	14	1.2
	120	20	5/10/20/40	38	12	10	10	28	25	9.6	h10	1.10	3	20	1.8
	150	20	5/10/20/40	39	15	11	12	28	25	11.5	h11	1.10	4	20	2.5
	170	25	5/10/25	45	17	12	15	33	30	14.3	h11	1.10	5	25	3.0
	200	32	5/10/20/32/64	58	20	14	18	44	40	17.0	h11	1.30	6	28	3.5
	250	32	5/10/20/32/64	69	25	15	22	54	50	21.0	h11	1.30	6	36	3.5
	300	40	5/10/12/16/20/25/30/40	70	30	16	28	54	50	26.6	h12	1.60	8	36	4.0
	350	50	5/10/12/16/20/25/30/40	82	35	17	32	65	60	30.3	h12	1.60	10	40	5.0
	500	63	10/20/40	107	50	20	48	87	80	45.5	h12	1.85	14	63	5.5
	600	80	10/20/40	109	60	22	58	87	80	55.0	h12	2.15	16	63	6.0

1) The allocation of screw ends to the bearing assemblies is clearly defined by the version.

End bearings for screw ends Form 02

Deep-groove ball bearing as per DIN 625

Application

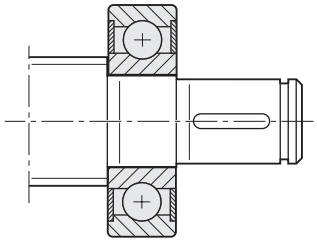

Separate technical dimensioning of the permissible drive torque is absolutely necessary.

Retaining ring as per DIN 471

Version[1)]	Centering hole		Hex socket		Thread		Deep-groove ball bearing		Retaining ring	
	Z	t_Z	S	t_S	G	t_G	Abbreviation	Part number	Abbreviation	Part number
100	M3	9.0	–	–	M3	5	6200.2RS	R3414 049 00	8x0.8	R3410 737 00
120	M3	9.0	4	4	M4	6	6201.2RS	R3414 042 00	10x1	R3410 745 00
150	M4	10.0	4	4	M5	8	6202.2RS	R3414 074 00	12x1	R3410 712 00
170	M5	12.5	4	4	M6	9	6203.2RS	R3414 050 00	15x1	R3410 748 00
200	M6	16.0	5	5	M6	9	6204.2RS	R3414 038 00	18x1.2	R3410 723 00
250	M8	19.0	6	6	M8	12	6205.2RS	R3414 063 00	22x1.2	R3410 714 00
300	M10	22.0	10	10	M10	15	6206.2RS	R3414 051 00	28x1.5	R3410 752 00
350	M12	28.0	10	10	M12	18	6207.2RS	R3414 075 00	32x1.5	R3410 753 00
500	M16	36.0	17	17	M16	24	6210.2RS	R3414 077 00	48x1.75	R3410 718 00
600	M20	42.0	19	19	M20	30	6212.2RS	R3414 078 00	58x2	R3410 728 00

Form K1, K1A

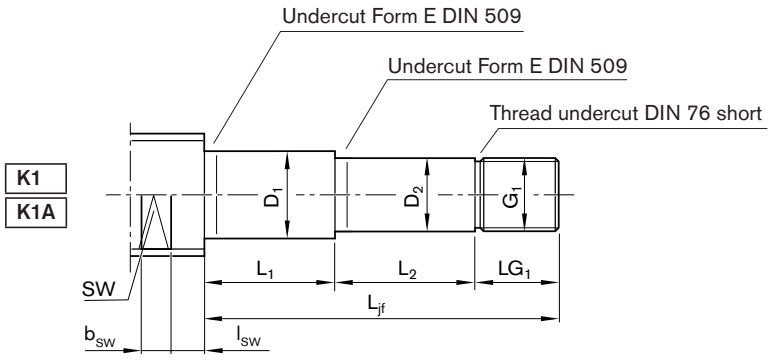

Option (machining of end face)	
K	None
Z	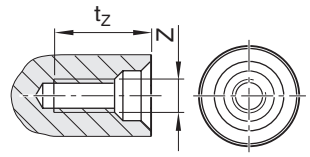
S	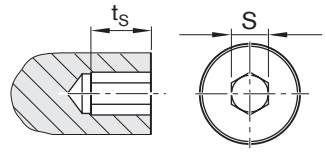
G	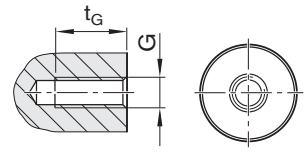

Ordering data:

BASA	20x5R x 3	SEM-E-S - 4	00	1	2	T7	R	K1AZ120	41Z120	1250	0	1

Form	Version[1]	Size		(mm)										
											Centering hole		Hex socket	
		d_0	P	L_{jf}	D_1 h11	L_1	D_2 h6	L_2	G_1	L_{G1}	Z	t_z	S	t_s
K1/K1A	**100**	16	5/10/16	40	12.5	10	10	18	M10x1	12	M3	9.0	4	4
	120	20	5/10/20/40	45	16.0	10	12	23	M12x1	12	M4	10.0	4	4
	170	25	5/10/25	55	21.0	10	17	23	M17x1	22	M6	16.0	5	5
	200	32	5/10/20/32/64	58	27.5	10	20	26	M20x1	22	M6	16.0	5	5
	250	40	5/10/12/16/20/25/30/40	90	33.5	10	25	54	M25x1.5	26	M10	22.0	8	8
	300	40	5/10/12/16/20/25/30/40	61	33.5	10	30	25	M30x1.5	26	M10	22.0	10	10
	301	50	5/10/12/16/20/25/30/40	90	43.0	10	30	54	M30x1.5	26	M10	22.0	10	10
	350	50	5	70	45.0	10	35	32	M35x1.5	28	M12	28.0	12	12
	400	63	10/20/40	82	56.0	10	40	44	M40x1.5	28	M16	36.0	12	12
	500	80	10/20/40	94	66.5	10	50	52	M50x1.5	32	M16	36.0	19	19

1) The allocation of screw ends to the bearing assemblies is clearly defined by the version.

End bearings for screw ends Form K1, K1A

Angular-contact thrust ball bearing LGF

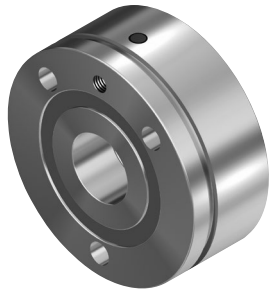

Angular-contact thrust ball bearing LGN

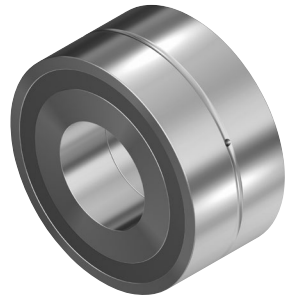

Slotted nut NMZ

Slotted nut NMA

						Angular-contact thrust ball bearing				Slotted nut	
Version[1)]	Thread		Wrench size			LGF		LGN		NMZ/NMA	
	G	t_g	SW	b_{SW}	l_{SW}	Abbreviation	Part number	Abbreviation	Part number	Abbreviation	Part number
100	M4	6	11	10	8.5	–	–	LGN-B-1034	R3414 003 06	NMZ 10x1	R3446 002 04
120	M5	8	15	10	8.5	LGF-B-1255	R3414 009 06	LGN-B-1242	R3414 004 06	NMZ 12x1	R3446 003 04
170	M6	9	19	10	10.5	LGF-B-1762	R3414 010 06	LGN-B-1747	R3414 005 06	NMA 17x1	R3446 014 04
200	M8	12	24	15	10.5	LGF-B-2068	R3414 001 06	LGN-B-2052	R3414 006 06	NMA 20x1	R3446 015 04
250	M10	15	30	15	12.5	LGF-C-2575	R3414 015 06	LGN-C-2557	R3414 014 06	NMA 25x1.5	R3446 011 04
300	M12	18	30	15	12.5	LGF-B-3080	R3414 011 06	LGN-B-3062	R3414 007 06	NMA 30x1.5	R3446 016 04
301	M12	18	41	22	15.5	LGF-C-3080	R3414 027 06	LGN-C-3062	R3414 023 06	NMA 30x1.5	R3446 016 04
350	M12	18	41	22	15.5	LGF-B-3590	R3414 026 06	LGN-B-3572	R3414 022 06	NMA 35x1.5	R3446 012 04
400	M16	24	50	27	16.5	LGF-B-40115	R3414 028 06	LGN-A-4090	R3414 024 06	NMA 40x1.5	R3446 018 04
500	M20	30	60	27	18.5	LGF-A-50140	R3414 029 06	LGN-A-50110	R3414 025 06	NMA 50x1.5	R3446 019 04

Form 12, 12A

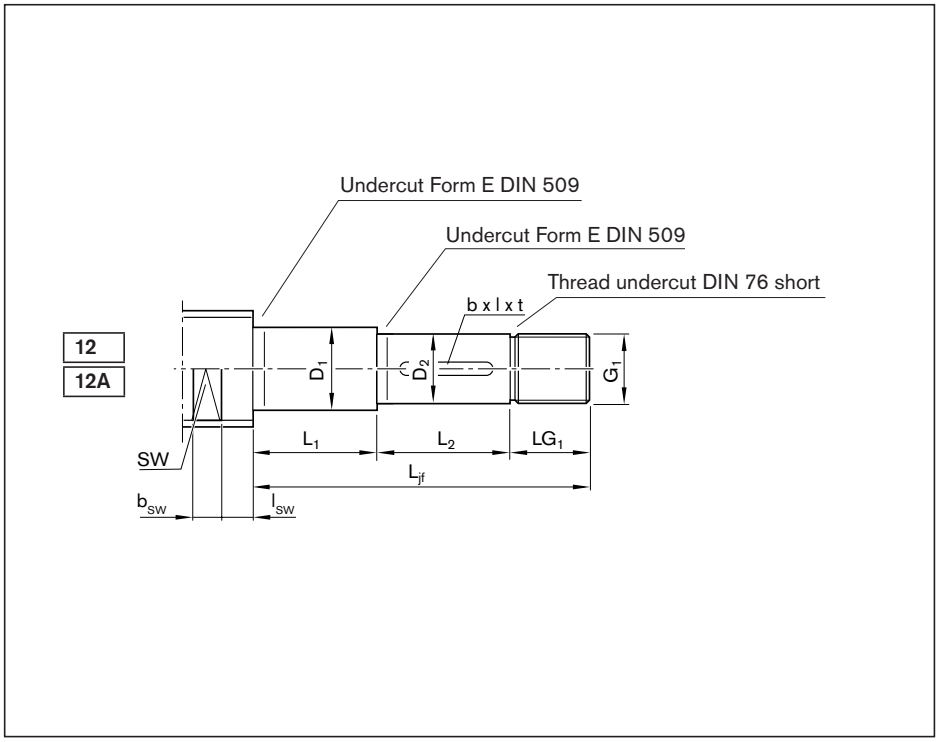

Option (machining of end face)	
K	None
Z	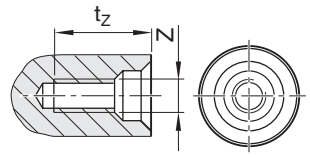
S	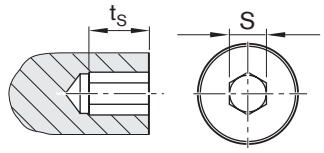
G	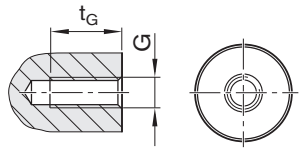

Ordering data:

BASA	20x5R x 3	SEM-E-S - 4	00	1	2	T7	R	K1AZ120	41Z120	1250	0	1

Form	Version[1]	Size		(mm)							Keyway as per DIN 6885			Centering hole		Hex socket	
		d_0	P	L_{jf}	D_1 h6	L_1	D_2 h7	L_2	G_1	LG_1	b P9	l	t	Z	t_Z	S	t_S
12/12A	**100**	16	5/10/16	48	10	18	8	20	M6x0.5	10	2	14	1.2	–	–	–	–
	120	20	5/10/20/40	60	12	23	10	25	M10x1	12	3	20	1.8	M3	9.0	4	4
	170	25	5/10/25	75	17	23	15	30	M15x1	22	5	25	3.0	M5	12.5	4	4
	200	32	5/10/20/32/64	88	20	26	18	40	M17x1	22	6	28	3.5	M6	16.0	5	5
	250	40	5/10/12/16/20/25/30/40	126	25	54	22	50	M20x1	22	6	36	3.5	M6	16.0	5	5
	300	40	5/10/12/16/20/25/30/40	101	30	25	28	50	M25x1.5	26	8	36	4.0	M10	22.0	8	8
	301	50	5/10/12/16/20/25/30/40	130	30	54	28	50	M25x1.5	26	8	36	4.0	M10	22.0	8	8
	350	50	5	118	35	32	32	60	M30x1.5	26	10	40	5.0	M10	22.0	10	10
	400	63	10/20/40	132	40	44	38	60	M35x1.5	28	10	40	5.0	M12	28.0	12	12
	500	80	10/20/40	160	50	52	48	80	M40x1.5	28	14	63	5.5	M16	36.0	12	12

1) The allocation of screw ends to the bearing assemblies is clearly defined by the version.

End bearings for screw ends Form 12, 12A

Angular-contact thrust ball bearing LGF

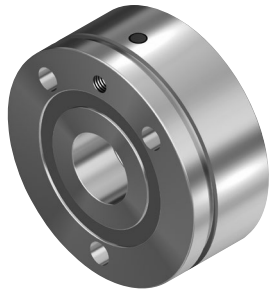

Angular-contact thrust ball bearing LGN

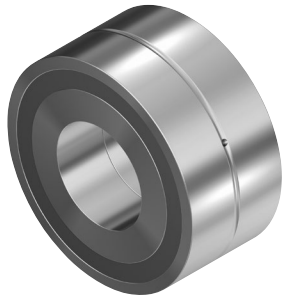

Application

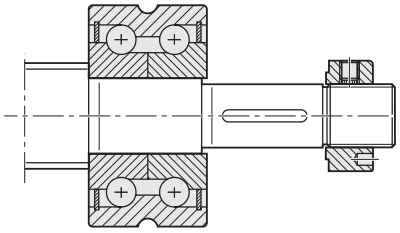

Separate technical dimensioning of the permissible drive torque is absolutely necessary.

Slotted nut NMZ

Slotted nut NMA

	Version[1)]	Thread		Wrench size			Angular-contact thrust ball bearing				Slotted nut	
							LGF		LGN		NMZ/NMA	
		G	t_G	SW	b_{SW}	l_{SW}	Abbreviation	Part number	Abbreviation	Part number	Abbreviation	Part number
	100	–	–	11	10	8.5	–	–	LGN-B-1034	R3414 003 06	NMZ6x0.5	R3446 001 04
	120	M4	6	15	10	8.5	LGF-B-1255	R3414 009 06	LGN-B-1242	R3414 004 06	NMZ10x1	R3446 002 04
	170	M6	9	19	10	10.5	LGF-B-1762	R3414 010 06	LGN-B-1747	R3414 005 06	NMA15x1	R3446 020 04
	200	M6	9	24	15	10.5	LGF-B-2068	R3414 001 06	LGN-B-2052	R3414 006 06	NMA17x1	R3446 014 04
	250	M8	12	30	15	12.5	LGF-B-2575	R3414 015 06	LGN-C-2557	R3414 014 06	NMA20x1	R3446 015 04
	300	M10	15	30	15	12.5	LGF-B-3080	R3414 011 06	LGN-B-3062	R3414 007 06	NMA25x1.5	R3446 011 04
	301	M10	15	41	22	15.5	LGF-C-3080	R3414 027 06	LGN-C-3062	R3414 023 06	NMA25x1.5	R3446 011 04
	350	M12	18	41	22	15.5	LGF-B-3590	R3414 026 06	LGN-B-3572	R3414 022 06	NMA30x1.5	R3446 016 04
	400	M12	18	50	27	16.5	LGF-B-40115	R3414 028 06	LGN-A-4090	R3414 024 06	NMA35x1.5	R3446 012 04
	500	M16	24	60	27	18.5	LGF-A-50140	R3414 029 06	LGN-A-50110	R3414 025 06	NMA40x1.5	R3446 018 04

Form 21, 22

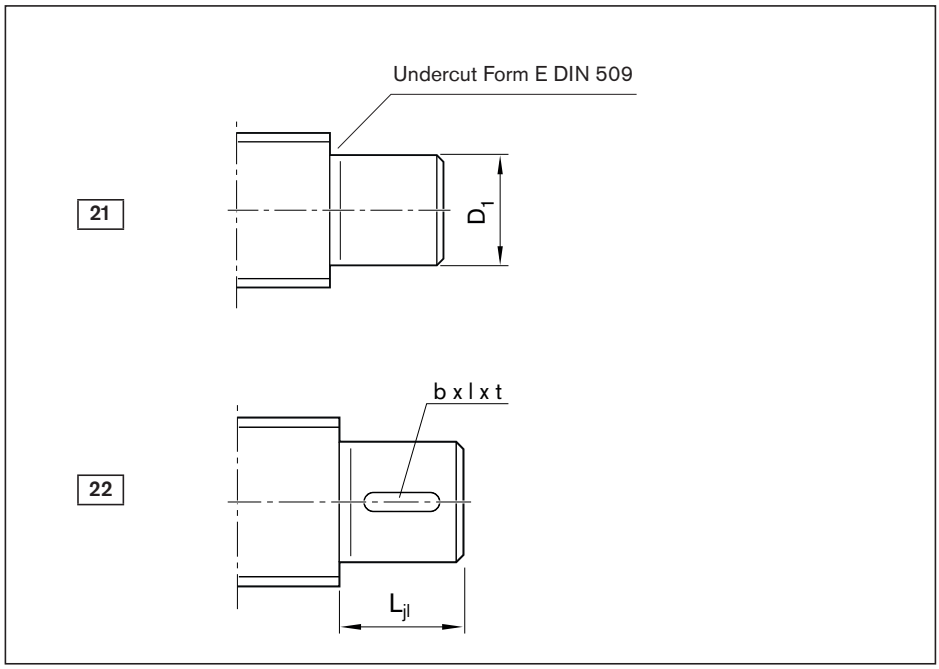

Option (machining of end face)	
K	None
Z	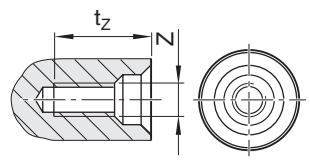
S	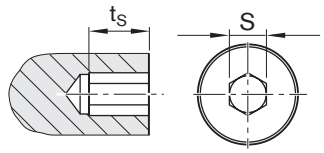
G	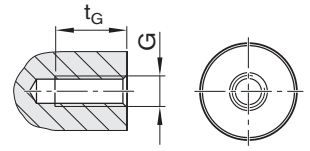

Ordering data:

BASA	20x5R x 3	SEM-E-S - 4	00	1	2	T7	R	21Z120	82Z120	1250	0	1

Form	Version[1]	Size		(mm)						
						Keyway as per DIN 6885			Centering hole	
		d_0	P	L_{jl}	D_1 j6	b P9	l	t	Z	t_Z
21	**050**	8	1/2/2.5/5	5	5	–	–	–	–	–
	060	12	2/5/10	6	6	–	–	–	–	–
	100	16	5/10/16	9	10	–	–	–	M3	9.0
	120	20	5/10/20/40	10	12	–	–	–	M4	10.0
	150	20	5/10/20/40	11	15	–	–	–	M5	12.5
	170	25	5/10/25	12	17	–	–	–	M6	16.0
	200	32	5/10/20/32/64	14	20	–	–	–	M6	16.0
	250	32	5/10/20/32/64	15	25	–	–	–	M10	22.0
	300	40	5/10/12/16/20/25/30/40	16	30	–	–	–	M10	22.0
	350	50	5/10/12/16/20/25/30/40	17	35	–	–	–	M12	28.0
	500	63	10/20/40	20	50	–	–	–	M16	36.0
	600	80	10/20	22	60	–	–	–	M20	42.0
22	**100**	16	5/10/16	11	10	3	6	1.8	M3	9.0
	120	20	5/10/20/40	13	12	4	8	2.5	M4	10.0
	150	20	5/10/20/40	15	15	5	10	3.0	M5	12.5
	170	25	5/10/25	15	17	5	10	3.0	M6	16.0
	200	32	5/10/20/32/64	24	20	6	14	3.5	M6	16.0
	250	32	5/10/20/32/64	28	25	8	18	4.0	M10	22.0
	300	40	5/10/12/16/20/25/30/40	28	30	8	18	4.0	M10	22.0
	350	50	5/10/12/16/20/25/30/40	32	35	10	22	5.0	M12	28.0
	500	63	10/20/40	46	50	14	36	5.5	M16	36.0
	600	80	10/20/40	60	60	18	50	7.0	M20	42.0

1) The allocation of screw ends to the bearing assemblies is clearly defined by the version.

End bearings for screw ends in Form 21

Application

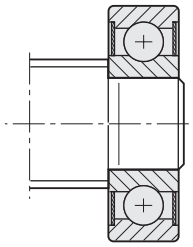

Separate technical dimensioning of the permissible drive torque is absolutely necessary.

Bearing assembly LAD[2)]

Version[1)]	Hex socket S	t_S	Thread G	t_G	Bearing assembly (deep-groove ball bearing as per DIN 625) LAD Abbreviation	Part number
050	–	–	–	–	625.2RS	R3414 048 00
060	–	–	–	–	626.2RS	R3414 043 00
100	4	4	M4	6	6200.2RS	R3414 049 00
120	4	4	M5	8	6201.2RS	R3414 042 00
150	4	4	M6	9	6202.2RS	R3414 074 00
170	5	5	M6	9	6203.2RS	R3414 050 00
200	5	5	M8	12	6204.2RS	R3414 038 00
250	8	8	M10	15	6205.2RS	R3414 063 00
300	10	10	M12	18	6206.2RS	R3414 051 00
350	12	12	M12	18	6207.2RS	R3414 075 00
500	19	19	M20	30	6210.2RS	R3414 077 00
600	19	19	M24	36	6212.2RS	R3414 078 00
100	4	4	M4	6	–	–
120	4	4	M5	8	–	–
150	4	4	M6	9	–	–
170	5	5	M6	9	–	–
200	5	5	M8	12	–	–
250	8	8	M10	15	–	–
300	10	10	M12	18	–	–
350	12	12	M12	18	–	–
500	19	19	M20	30	–	–
600	19	19	M24	36	–	–

2) Scope of delivery: 1 bearing, 2 retaining rings.

Form 31

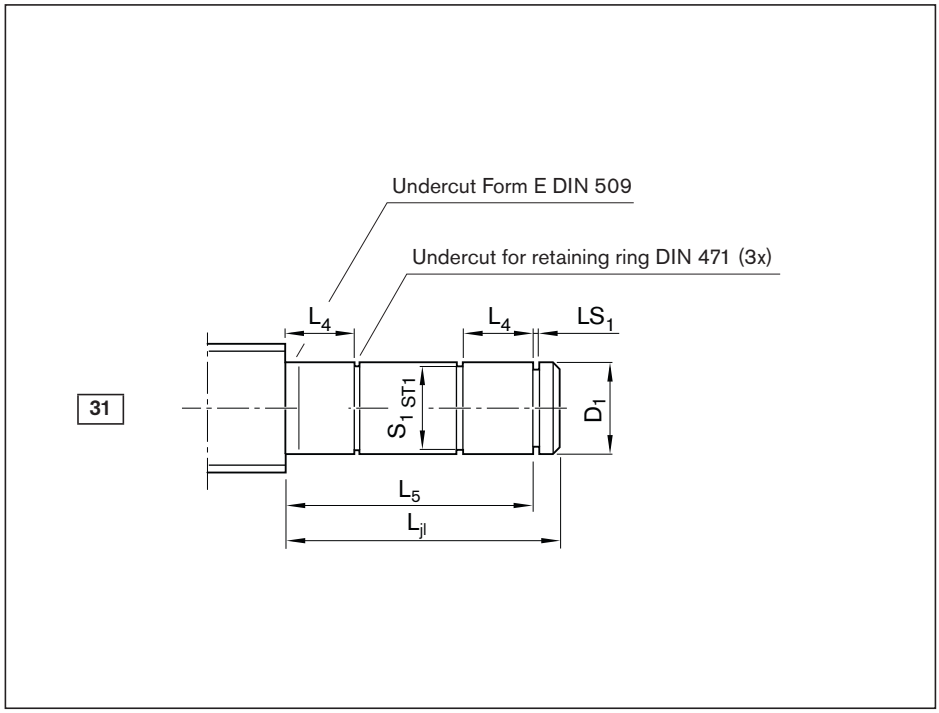

Option (machining of end face)	
K	None
Z	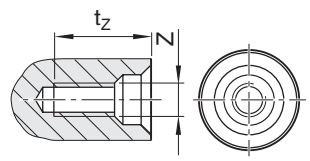
S	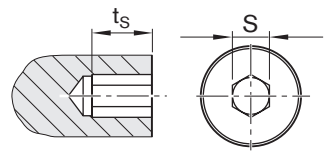
G	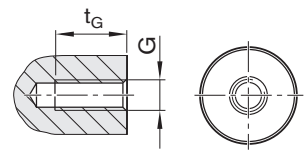

Ordering data:

BASA	20x5R x 3	SEM-E-S - 4	00	1	2	T7	R	31Z120	82Z120	1250	0	1

Form	Version[1]	Size		(mm)								
											Centering hole	
		d_0	P	L_{jl}	D_1 j6	L_4	L_5	S_1	ST1	LS_1 H13	Z	t_Z
31	**050**	8	1/2/2.5/5	22	5	5	20	4.8	h10	0.70	–	–
	060	12	2/5/10	26	6	6	24	5.7	h10	0.80	–	–
	100	16	5/10/16	39	10	9	36	9.6	h10	1.10	M3	9.0
	120	20	5/10/20/40	43	12	10	40	11.5	h11	1.10	M4	10.0
	150	20	5/10/20/40	47	15	11	44	14.3	h11	1.10	M5	12.5
	170	25	5/10/25	51	17	12	48	16.2	h11	1.10	M6	16.0
	200	32	5/10/20/32/64	60	20	14	56	19.0	h11	1.30	M6	16.0
	250	32	5/10/20/32/64	64	25	15	60	23.9	h12	1.30	M10	22.0
	300	40	5/10/12/16/20/25/30/40	68	30	16	64	28.6	h12	1.60	M10	22.0
	350	50	5/10/12/16/20/25/30/40	73	35	17	68	33.0	h12	1.60	M12	28.0
	500	63	10/20/40	87	50	20	80	47.0	h12	2.15	M16	36.0
	600	80	10/20/40	95	60	22	88	57.0	h12	2.15	M20	42.0

1) The allocation of screw ends to the bearing assemblies is clearly defined by the version.
Note: Form 31 with double floating bearing increases the critical speed, n_{cr}. See “Critical speed n_{cr}” on page 174.

End bearings for screw ends in Form 31

Pillow block unit SEC-L assembly

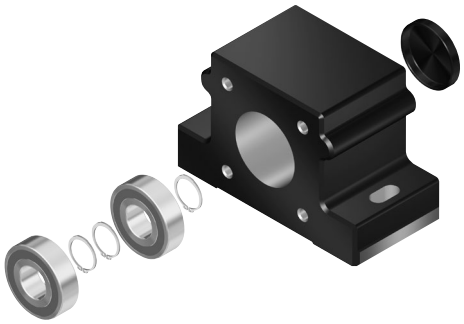

Pillow block unit SEC-L assembly

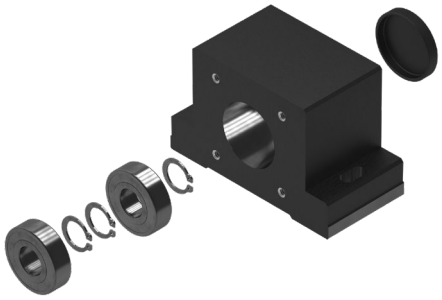

Application

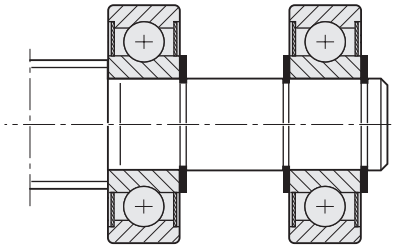

Bearing assembly LAD[2)]

Version[1)]	Hex socket S	Hex socket t_S	Thread G	Thread t_G	Module Pillow block unit SEC-L Part number	Module Pillow block unit SES-L Part number	Bearing LAD[2)] Part number
050	–	–	–	–	–	–	R1590 605 00
060	–	–	–	–	–	–	R1590 606 00
100	4	4	M4	6	–	–	R1590 610 00
120	4	4	M5	8	–	–	R1590 612 00
150	4	4	M6	9	R1594 615 00	R1595 615 00	R1590 615 00
170	5	5	M6	9	–	R1595 617 00	R1590 617 00
200	5	5	M8	12	R1594 620 00	R1595 620 00	R1590 620 00
250	8	8	M10	15	–	–	R1590 625 00
300	10	10	M12	18	R1594 630 00	R1595 630 00	R1590 630 00
350	12	12	M12	18	–	–	R1590 635 00
500	19	19	M20	30	–	–	R1590 650 00
600	19	19	M24	36	–	–	R1590 660 00

2) Items delivered per bearing LAD: 1 bearing, 2 retaining rings. For application with form 31: 2x assemblies required.

Form 41

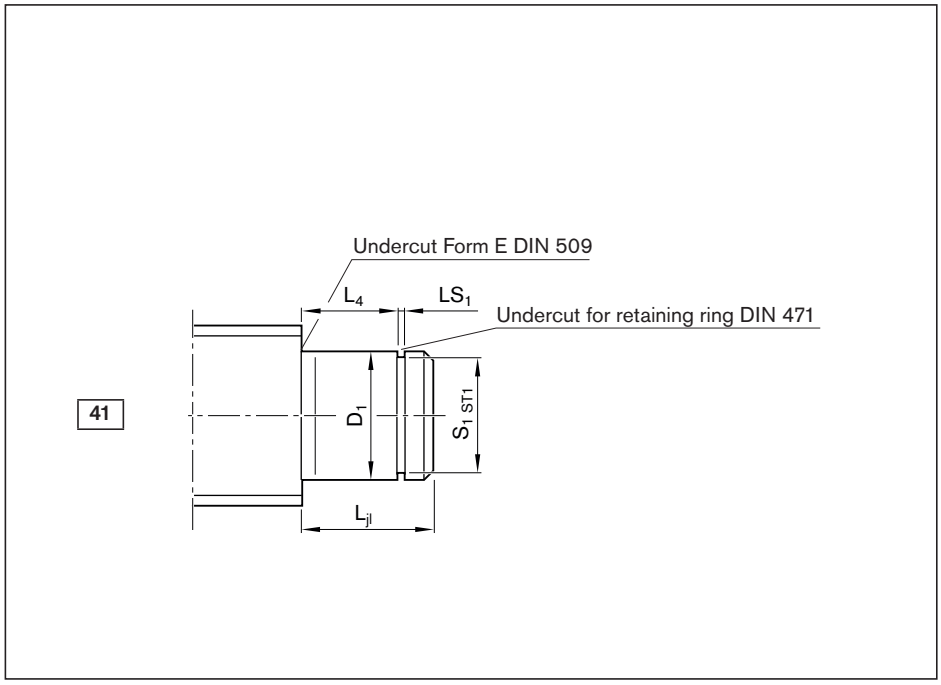

Option (machining of end face)	
K	None
Z	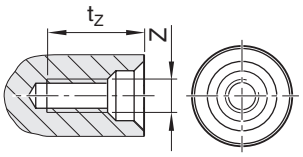
S	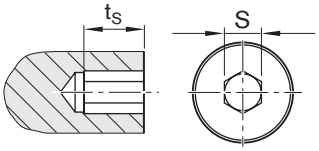
G	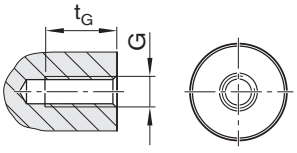

Ordering data:

BASA	20x5R x 3	SEM-E-S - 4	00	1	2	T7	R	41Z120	82Z120	1250	0	1

Form	Version[1)]	Size		(mm)							
										Centering hole	
		d_0	P	L_{jl}	D_1 j6	L_4	S_1	ST1	LS_1 H13	Z	t_Z
41	**050**	8	1/2/2.5/5	7	5	5	4.8	h10	0.70	–	–
	060	12	2/5/10	8	6	6	5.7	h10	0.80	–	–
	100	16	5/10/16	12	10	9	9.6	h10	1.10	M3	9.0
	120	20	5/10/20/40	13	12	10	11.5	h11	1.10	M4	10.0
	150	20	5/10/20/40	14	15	11	14.3	h11	1.10	M5	12.5
	151	20	5/10/20/40	14	15	9	14.3	h11	1.10	M5	12.5
	170	25	5/10/25	15	17	12	16.2	h11	1.10	M6	16.0
	200	32	5/10/20/32/64	18	20	14	19.0	h11	1.30	M6	16.0
	202	25	5/10/25	19	20	14	19.0	h11	1.30	M6	16.0
	250	32	5/10/20/32/64	19	25	15	23.9	h12	1.30	M10	22.0
	252	32	5/10/20/32/64	20	25	15	23.9	h12	1.30	M10	22.0
	300	40	5/10/12/16/20/25/30/40	20	30	16	28.6	h12	1.60	M10	22.0
	350	50	5/10/12/16/20/25/30/40	22	35	17	33.0	h12	1.60	M12	28.0
	500	63	10/20/40	27	50	20	47.0	h12	2.15	M16	36.0
	600	80	10/20/40	29	60	22	57.0	h12	2.15	M20	42.0

1) The allocation of screw ends to the bearing assemblies is clearly defined by the version.

End bearings for screw ends in Form 41

Pillow block unit SEB-L assembly

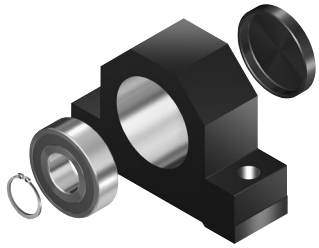

Pillow block unit SED-L-S assembly

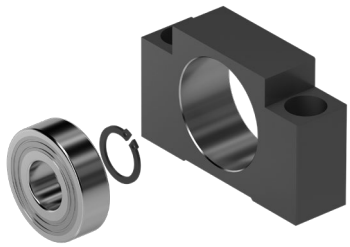

Application

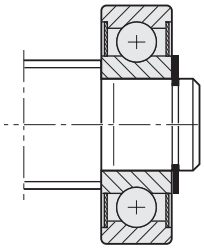

Bearing assembly LAD[2)]

Version[1)]	Hex socket S	t_S	Thread G	t_G	Bearing assembly LAD[2)] Part number	Pillow block unit SEB-L Part number	Pillow block unit SED-L-S Part number
050	–	–	–	–	R1590 605 00	R1591 605 00	–
060	–	–	–	–	R1590 606 00	R1591 606 20	–
100	4	4	M4	6	R1590 610 00	R1591 610 20	–
120	4	4	M5	8	R1590 612 00	R1591 612 20	–
150	4	4	M6	9	R1590 615 00	–	–
151	4	4	M6	9	–	–	R1596 615 00
170	5	5	M6	9	R1590 617 00	R1591 617 20	–
200	5	5	M8	12	R1590 620 00	R1591 620 20	–
202	5	5	M8	12	–	–	R1596 620 00
250	8	8	M10	15	R1590 625 00	–	–
252	8	8	M10	15	–	–	R1596 625 00
300	10	10	M12	18	R1590 630 00	R1591 630 20	–
350	12	12	M12	18	R1590 635 00	R1591 635 20	–
500	19	19	M20	30	R1590 650 00	R1591 650 20	–
600	19	19	M24	36	R1590 660 00	R1591 660 20	–

2) Scope of delivery: 1 bearing, 2 retaining rings.

Form 51, 51A, 52, 52A

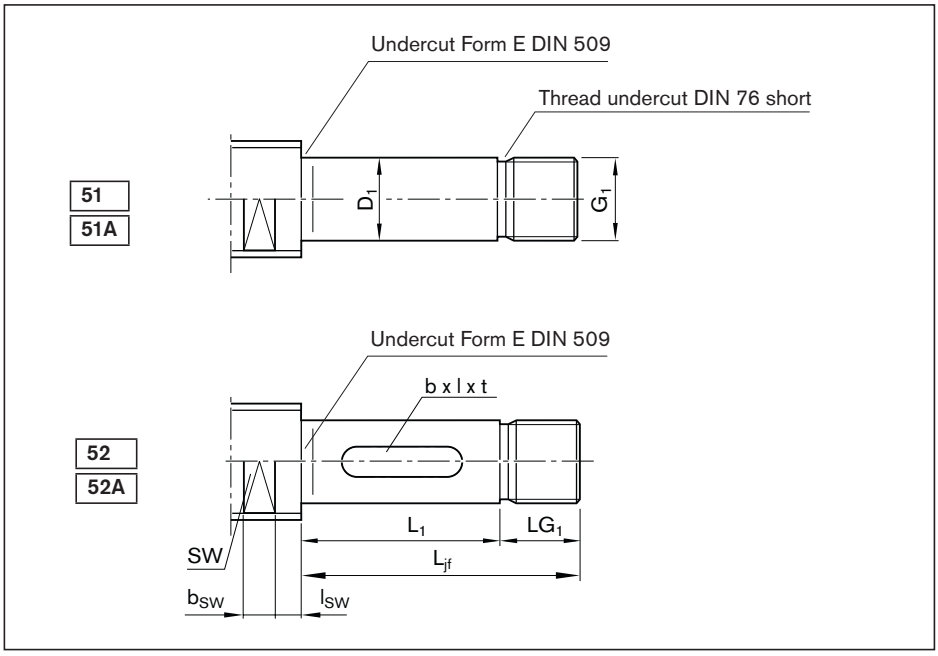

Option (machining of end face)	
K	None
Z	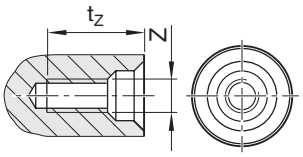
S	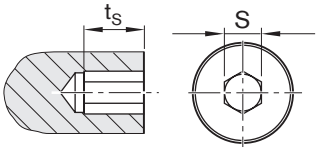
G	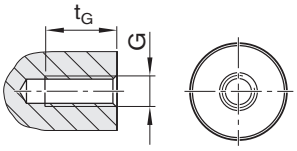

Ordering data:

BASA	20x5R x 3	SEM-E-S - 4	00	1	2	T7	R	52AZ120	82Z120	1250	0	1

Form	Version[1]	Size		(mm)							
									Keyway as per DIN 6885		
		d_0	P	L_{jf}	D_1 h6	L_1	G_1	LG_1	b P9	l	t
51/51A	**060**	12	2/5/10	24	6	14	M6x0.5	10	–	–	–
	100	16	5/10/16	30	10	18	M10x1	12	–	–	–
	120	20	5/10/20/40	35	12	23	M12x1	12	–	–	–
	170	25	5/10/25	45	17	23	M17x1	22	–	–	–
	200	32	5/10/20/32/64	48	20	26	M20x1	22	–	–	–
	209	32	5/10/20/32/64	108	20	77	M20x1	31	–	–	–
	250	40	5/10/12/16/20/25/30/40	80	25	54	M25x1.5	26	–	–	–
	300	40	5/10/12/16/20/25/30/40	51	30	25	M30x1.5	26	–	–	–
	301	50	5/10/12/16/20/25/30/40	80	30	54	M30x1.5	26	–	–	–
	309	40	5/10/12/16/20/25/30/40	117	30	83	M30x1.5	34	–	–	–
	350	50	5	60	35	32	M35x1.5	28	–	–	–
	359	50	5/10/20/30/40	145	35	109	M35x1.5	36	–	–	–
	400	63	10/20/40	72	40	44	M40x1.5	28	–	–	–
	409	63	10/20/40	183	40	147	M40x1.5	36	–	–	–
	500	80	10/20/40	84	50	52	M50x1.5	32	–	–	–
52/52A	**080**	12	2/5/10	30	8	20	M8x0.75	10	2	14	1.2
	100	16	5/10/16	37	10	25	M10x1	12	3	20	1.8
	120	20	5/10/20/40	37	12	25	M12x1	12	4	20	2.5
	170	25	5/10/25	52	17	30	M17x1	22	5	25	3.0
	200	32	5/10/20/32/64	62	20	40	M20x1	22	6	28	3.5
	250	40	5/10/12/16/20/25/30/40	76	25	50	M25x1.5	26	8	36	4.0
	300	40	5/10/12/16/20/25/30/40	76	30	50	M30x1.5	26	8	36	4.0
	350	50	5/10/12/16/20/25/40	78	35	50	M35x1.5	28	10	40	5.0
	400	63	10/20/40	88	40	60	M40x1.5	28	12	50	5.0
	500	80	10/20/40	112	50	80	M50x1.5	32	14	63	5.5

1) The allocation of screw ends to the bearing assemblies is clearly defined by the version.

End bearings for screw ends Form 51, 51A

Pillow block unit SEB-F assembly

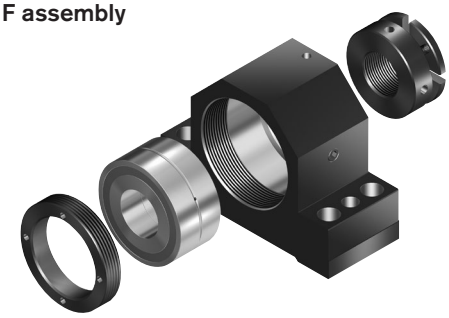

Application

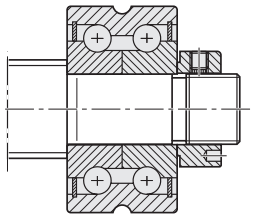

Separate technical dimensioning of the permissible drive torque is absolutely necessary.

Bearing assembly LAN

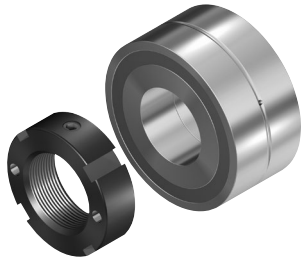

Bearing assembly LAF

Version[1)]	Centering hole		Hex socket		Thread		Wrench size			Module		
										Pillow block unit	Bearing	Bearing
	Z	tz	S	t_S	G	t_G	SW	bSW	ISW	SEB-F	LAF	LAN
										Part number	Part number	Part number
060	–	–	–	–	–	–	9	10	8.5	R1591 106 20	–	R1590 106 00
100	M3	9	4	4	M4	6	11	10	8.5	R1591 110 20	–	R1590 110 00
120	M4	10	4	4	M5	8	15	10	8.5	R1591 112 20	R1590 012 00	R1590 112 00
170	M6	16	5	5	M6	9	19	10	10.5	R1591 117 30	R1590 017 30	R1590 117 30
200	M6	16	5	5	M8	12	24	15	10.5	R1591 120 30	R1590 020 30	R1590 120 30
209	M6	16	5	5	M8	12	24	15	10.5	–	–	–
250	M10	22	8	8	M10	15	30	15	12.5	R1591 225 30	R1590 325 30	R1590 225 30
300	M10	22	10	10	M12	18	30	15	12.5	R1591 130 30	R1590 030 30	R1590 130 30
301	M10	22	10	10	M12	18	41	22	15.5	R1591 230 30	R1590 330 30	R1590 230 30
309	M10	22	10	10	M12	18	30	15	12.5	–	–	–
350	M12	28	12	12	M12	18	41	22	15.5	R1591 135 30	R1590 035 30	R1590 135 30
359	M12	28	12	12	M12	18	41	22	15.5	–	–	–
400	M16	36	12	12	M16	24	50	27	16.5	R1591 140 30	R1590 040 30	R1590 140 30
409	M16	36	12	12	M16	24	50	27	16.5	–	–	–
500	M16	36	19	19	M20	30	60	27	18.5	R1591 150 30	R1590 050 30	R1590 150 30
080	M3	9	–	–	M3	5	9	10	8.5	–	–	–
100	M3	9	4	4	M4	6	11	10	8.5	–	–	–
120	M4	10	4	4	M5	8	15	10	8.5	–	–	–
170	M6	16	5	5	M6	9	19	10	10.5	–	–	–
200	M6	16	5	5	M8	12	24	15	10.5	–	–	–
250	M10	22	8	8	M10	15	30	15	12.5	–	–	–
300	M10	22	10	10	M12	18	30	15	12.5	–	–	–
350	M12	28	12	12	M12	18	41	22	15.5	–	–	–
400	M16	36	12	12	M16	24	50	27	16.5	–	–	–
500	M16	36	19	19	M20	30	60	27	18.5	–	–	–

Form 61, 62

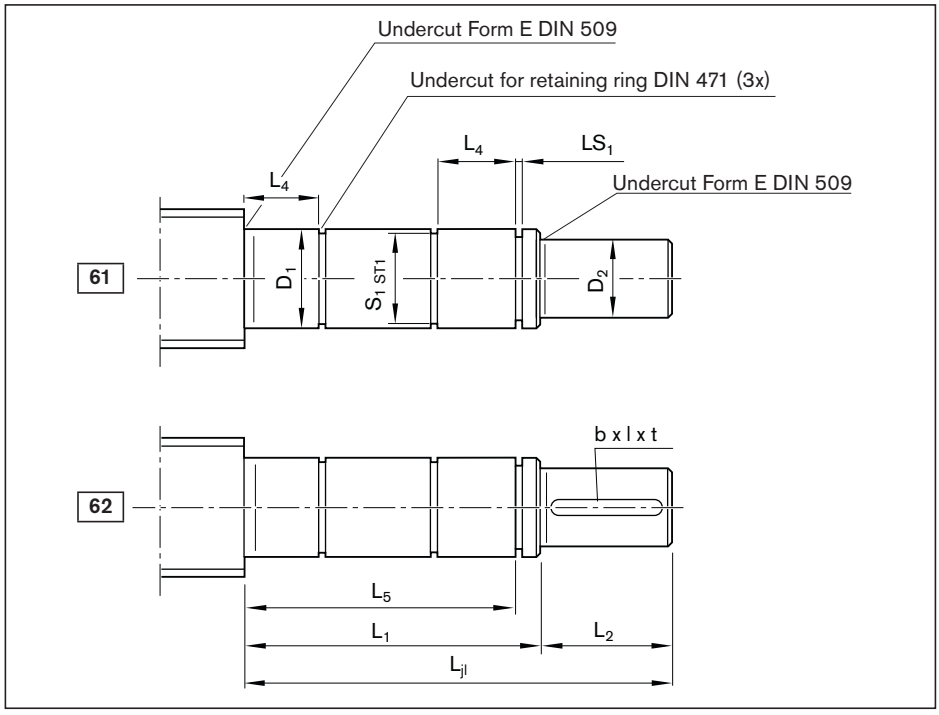

Option (machining of end face)	
K	None
Z	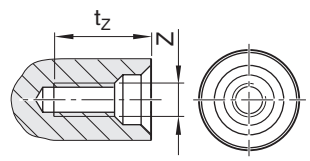
S	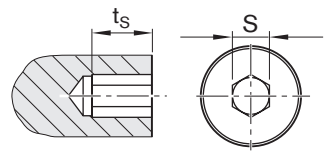
G	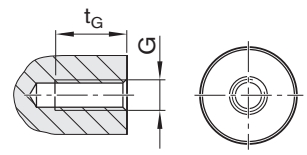

Ordering data:

BASA	20x5R x 3	SEM-E-S - 4	00	1	2	T7	R	62Z120	51Z120	1250	0	1

Form	Version[1]	Size		(mm)									
		d_0	P	L_{jl}	D_1 j6	L_1	D_2 h7	L_2	L_4	L_5	S_1	ST1	LS_1 H13
61	**050**	8	1/2/2.5/5	34	5	22	4	12	5	20	4.8	h10	0.70
	060	12	2/5/10	42	6	26	5	16	6	24	5.7	h10	0.80
	100	16	5/10/16	59	10	39	8	20	9	36	9.6	h10	1.10
	120	20	5/10/20/40	68	12	43	10	25	10	40	11.5	h11	1.10
	150	20	5/10/20/40	72	15	47	12	25	11	44	14.3	h11	1.10
	170	25	5/10/25	81	17	51	15	30	12	48	16.2	h11	1.10
	200	32	5/10/20/32/64	100	20	60	18	40	14	56	19.0	h11	1.30
	250	32	5/10/20/32/64	114	25	64	22	50	15	60	23.9	h12	1.30
	300	40	5/10/12/16/20/25/30/40	118	30	68	28	50	16	64	28.6	h12	1.60
	350	50	5/10/12/16/20/25/30/40	133	35	73	32	60	17	68	33.0	h12	1.60
	500	63	10/20/40	167	50	87	48	80	20	80	47.0	h12	2.15
	600	80	10/20/40	175	60	95	58	80	22	88	57.0	h12	2.15
62	**100**	16	5/10/16	59	10	39	8	20	9	36	9.6	h10	1.10
	120	20	5/10/20/40	68	12	43	10	25	10	40	11.5	h11	1.10
	150	20	5/10/20/40	72	15	47	12	25	11	44	14.3	h11	1.10
	170	25	5/10/25	81	17	51	15	30	12	48	16.2	h11	1.10
	200	32	5/10/20/32/64	100	20	60	18	40	14	56	19.0	h11	1.30
	250	32	5/10/20/32/64	114	25	64	22	50	15	60	23.9	h12	1.30
	300	40	5/10/12/16/20/25/30/40	118	30	68	28	50	16	64	28.6	h12	1.60
	350	50	5/10/12/16/20/25/30/40	133	35	73	32	60	17	68	33.0	h12	1.60
	500	63	10/20/40	167	50	87	48	80	20	80	47.0	h12	2.15
	600	80	10/20/40	175	60	95	58	80	22	88	57.0	h12	2.15

1) The allocation of screw ends to the bearing assemblies is clearly defined by the version.

End bearings
for screw ends Form 61, 62

Application

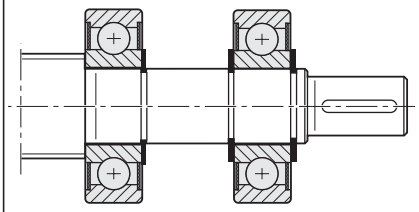

Separate technical dimensioning of the permissible drive torque is absolutely necessary.

Bearing assembly LAD[2)]

Version[1)]	Keyway as per DIN 6885			Centering hole		Hex socket		Thread		Bearing assembly LAD[2)] Part number
	b P9	l	t	Z	t_Z	S	t_S	G	t_G	
050	–	–	–	–	–	–	–	–	–	R1590 605 00
060	–	–	–	–	–	–	–	–	–	R1590 606 00
100	–	–	–	M3	9.0	–	–	M3	5	R1590 610 00
120	–	–	–	M3	9.0	4	4	M4	6	R1590 612 00
150	–	–	–	M4	10.0	4	4	M5	8	R1590 615 00
170	–	–	–	M5	12.5	4	4	M6	9	R1590 617 00
200	–	–	–	M6	16.0	5	5	M6	9	R1590 620 00
250	–	–	–	M8	19.0	6	6	M8	12	R1590 625 00
300	–	–	–	M10	22.0	10	10	M10	15	R1590 630 00
350	–	–	–	M12	28.0	10	10	M12	18	R1590 635 00
500	–	–	–	M16	36.0	17	17	M16	24	R1590 650 00
600	–	–	–	M20	42.0	19	19	M20	42	R1590 660 00
100	2	14	1.2	M3	9.0	–	–	M3	5	R1590 610 00
120	3	20	1.8	M3	9.0	4	4	M4	6	R1590 612 00
150	4	20	2.5	M4	10.0	4	4	M5	8	R1590 615 00
170	5	25	3.0	M5	12.5	4	4	M6	9	R1590 617 00
200	6	28	3.5	M6	16.0	5	5	M6	9	R1590 620 00
250	6	36	3.5	M8	19.0	6	6	M8	12	R1590 625 00
300	8	36	4.0	M10	22.0	10	10	M10	15	R1590 630 00
350	10	40	5.0	M12	28.0	10	10	M12	18	R1590 635 00
500	14	63	5.5	M16	36.0	17	17	M16	24	R1590 650 00
600	16	63	6.0	M20	42.0	19	19	M20	42	R1590 660 00

2) Scope of delivery per assembly: 1 bearing, 2 retaining rings. For application with form 61-62: 2x assemblies required.

Form 71, 72

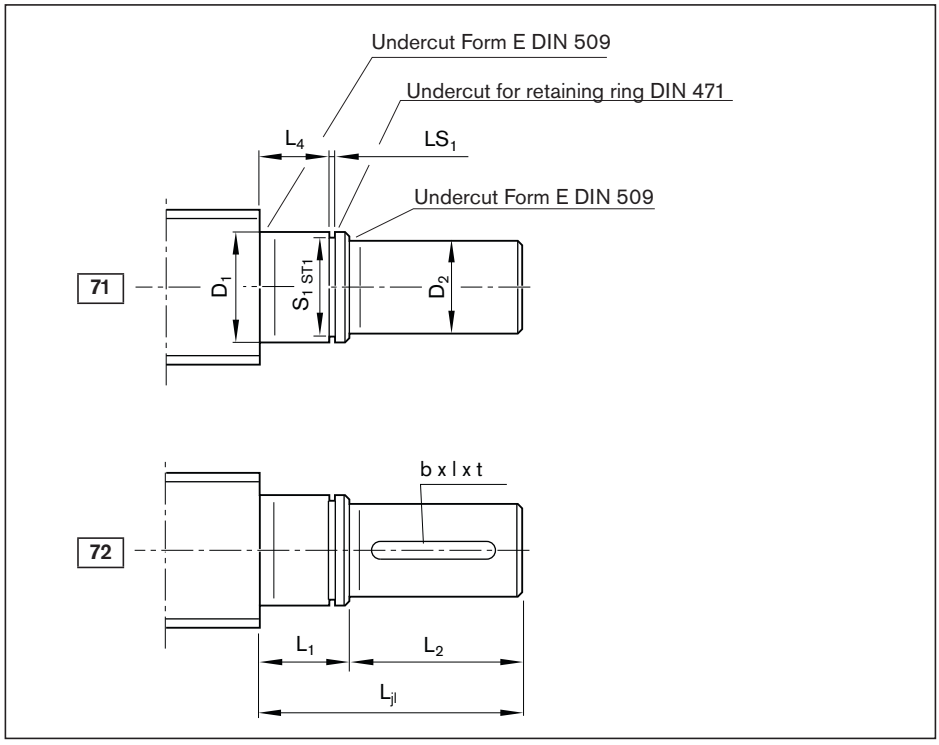

Option (machining of end face)	
K	None
Z	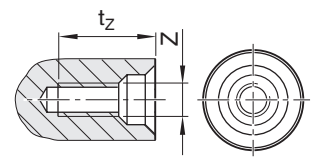
S	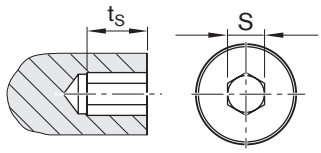
G	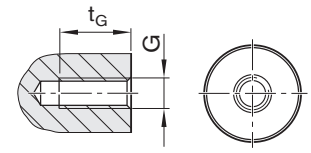

Ordering data:

BASA	20x5R x 3	SEM-E-S - 4	00	1	2	T7	R	72Z120	51Z120	1250	0	1

Form	Version[1]	Size		(mm)								
		d_0	P	L_{jl}	D_1 j6	L_1	D_2 h7	L_2	L_4	S_1	ST1	LS_1 H13
71	**050**	8	1/2/2.5/5	19	5	7	4	12	5	4.8	h10	0.70
	060	12	2/5/10	24	6	8	5	16	6	5.7	h10	0.80
	100	16	5/10/16	32	10	12	8	20	9	9.6	h10	1.10
	120	20	5/10/20/40	38	12	13	10	25	10	11.5	h11	1.10
	150	20	5/10/20/40	39	15	14	12	25	11	14.3	h11	1.10
	170	25	5/10/25	45	17	15	15	30	12	16.2	h11	1.10
	200	32	5/10/20/32/64	58	20	18	18	40	14	19.0	h11	1.30
	250	32	5/10/20/32/64	69	25	19	22	50	15	23.9	h12	1.30
	300	40	5/10/12/16/20/25/30/40	70	30	20	28	50	16	28.6	h12	1.60
	350	50	5/10/12/16/20/25/30/40	82	35	22	32	60	17	33.0	h12	1.60
	500	63	10/20/40	107	50	27	48	80	20	47.0	h12	2.15
	600	80	10/20/40	109	60	29	58	80	22	57.0	h12	2.15
72	**100**	16	5/10/16	32	10	12	8	20	9	9.6	h10	1.10
	120	20	5/10/20/40	38	12	13	10	25	10	11.5	h11	1.10
	150	20	5/10/20/40	39	15	14	12	25	11	14.3	h11	1.10
	170	25	5/10/25	45	17	15	15	30	12	16.2	h11	1.10
	200	32	5/10/20/32/64	58	20	18	18	40	14	19.0	h11	1.30
	250	32	5/10/20/32/64	69	25	19	22	50	15	23.9	h12	1.30
	300	40	5/10/12/16/20/25/30/40	70	30	20	28	50	16	28.6	h12	1.60
	350	50	5/10/12/16/20/25/30/40	82	35	22	32	60	17	33.0	h12	1.60
	500	63	10/20/40	107	50	27	48	80	20	47.0	h12	2.15
	600	80	10/20/40	109	60	29	58	80	22	57.0	h12	2.15

1) The allocation of screw ends to the bearing assemblies is clearly defined by the version.

End bearings
for screw ends Form 71, 72

Application

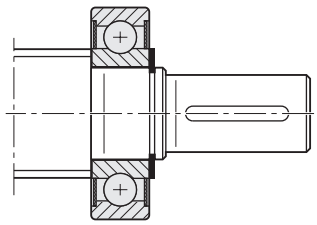

Separate technical dimensioning of the permissible drive torque is absolutely necessary.

Bearing assembly LAD[2)]

Version[1)]	Keyway as per DIN 6885			Centering hole		Hex socket		Thread		Bearing assembly LAD[2)] Part number
	b P9	l	t	Z	t_Z	S	t_S	G	t_G	
050	–	–	–	–	–	–	–	–	–	R1590 605 00
060	–	–	–	–	–	–	–	–	–	R1590 606 00
100	–	–	–	M3	9	–	–	M3	5	R1590 610 00
120	–	–	–	M3	9	4	4	M4	6	R1590 612 00
150	–	–	–	M4	10	4	4	M5	8	R1590 615 00
170	–	–	–	M5	12.5	4	4	M6	9	R1590 617 00
200	–	–	–	M6	16	5	5	M6	9	R1590 620 00
250	–	–	–	M8	19	6	6	M8	12	R1590 625 00
300	–	–	–	M10	22	10	10	M10	15	R1590 630 00
350	–	–	–	M12	28	10	10	M12	18	R1590 635 00
500	–	–	–	M16	36	17	17	M16	24	R1590 650 00
600	–	–	–	M20	42	19	19	M20	30	R1590 660 00
100	2	14	1.2	M3	9	–	–	M3	5	R1590 610 00
120	3	20	1.8	M3	9	4	4	M4	6	R1590 612 00
150	4	20	2.5	M4	10	4	4	M5	8	R1590 615 00
170	5	25	3.0	M5	12.5	4	4	M6	9	R1590 617 00
200	6	28	3.5	M6	16	5	5	M6	9	R1590 620 00
250	6	36	3.5	M8	19	6	6	M8	12	R1590 625 00
300	8	36	4.0	M10	22	10	10	M10	15	R1590 630 00
350	10	40	5.0	M12	28	10	10	M12	18	R1590 635 00
500	14	63	5.5	M16	36	17	17	M16	24	R1590 650 00
600	16	63	6.0	M20	42	19	19	M20	30	R1590 660 00

2) Scope of delivery: 1 bearing, 2 retaining rings.

Form 81, 81A, 82, 82A

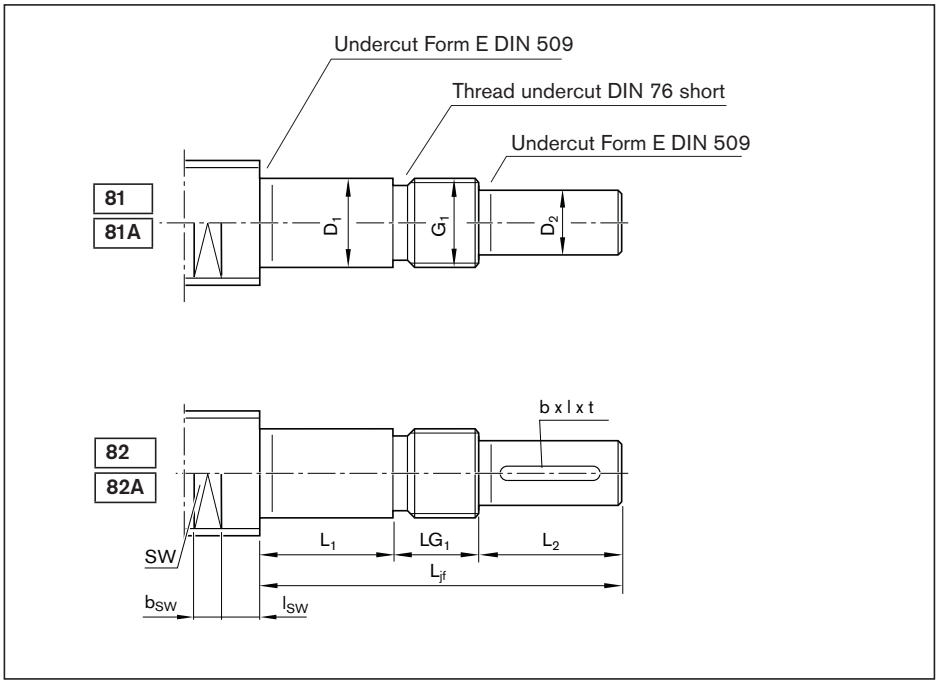

Option (machining of end face)	
K	None
Z	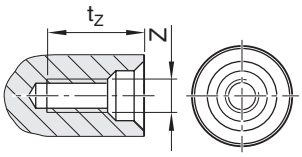
S	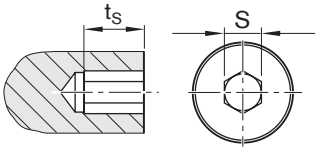
G	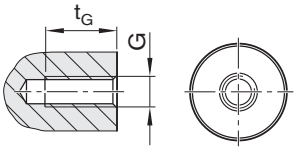

Ordering data:

BASA	20x5R x 3	SEM-E-S - 4	00	1	2	T7	R	81AZ120	41Z120	1250	0	1

Form	Version[1]	Size		(mm)							Centering hole		Hex socket		Thread	
		d_0	P	L_{jf}	D_1 h6	L_1	D_2 h7	L_2	G_1	LG_1	Z	t_Z	S	t_S	G	t_g
81/81A	**060**	12	2/5/10	40	6	14	5	16	M6x0.5	10	–	–	–	–	–	–
	061	12	2/5/10	41	6	10	5	16	M6x0.5	15	–	–	–	–	–	–
	100	16	5/10/16	50	10	18	8	20	M10x1	12	M3	9.0	–	–	M3	5
	104	16	5/10/16	66	10	34	8	20	M10x1	12	M3	9.0	–	–	M3	5
	120	20	5/10/20/40	60	12	23	10	25	M12x1	12	M3	9.0	4	4	M4	6
	122	20	5/10/20/40	60	12	17	10	25	M12x1	18	M3	9.0	4	4	M4	6
	123	20	5/10/20/40	60	12	23	10	25	M12x1	12	M3	9.0	4	4	M4	6
	124	20	5/10/20/40	75	12	38	10	25	M12x1	12	M3	9.0	4	4	M4	6
	151	25	5/10/25	60	15	19	12	25	M15x1	16	M4	10.0	4	4	M5	8
	170	25	5/10/25	75	17	23	15	30	M17x1	22	M5	12.5	4	4	M6	9
	173[2]	25	5/10/25	75	17	23	15	30	M17x1	22	M5	12.5	4	4	M6	9
	175	25	5/10/25	78	17	26	15	30	M17x1	22	M5	12.5	4	4	M6	9
	200	32	5/10/20/32/64	88	20	26	18	40	M20x1	22	M6	16.0	5	5	M6	9
	203	32	5/10/20/32/64	78	20	26	16	35	M20x1	17	M5	12.5	4	4	M6	9
	204	32	5/10/20/32/64	80	20	25	18	40	M20x1	15	M6	16.0	5	5	M6	9
	206	32	5/10/20/32/64	116	20	54	18	40	M20x1	22	M6	16.0	5	5	M6	9
	250	40	10/12/16/20/25/30/40	130	25	54	22	50	M25x1.5	26	M8	19.0	6	6	M8	12
	300	40	5/10/12/16/20/25/30/40	101	30	25	25	50	M30x1.5	26	M10	22.0	8	8	M10	15
	301	40	5/10/12/16/20/25/30/40	93	30	25	25	50	M30x1.5	18	M10	22.0	8	8	M10	15
	302	40	10/12/16/20/25/30/40	130	30	54	25	50	M30x1.5	26	M10	22.0	8	8	M10	15
	305	40	10/12/16/20/25/30/40	121	30	53	25	50	M30x1.5	18	M10	22.0	8	8	M10	15
	306	50	10/12/16/20/25/30/40	130	30	54	25	50	M30x1.5	26	M10	22.0	8	8	M10	15
	309	40	5/10/12/16/20/40	150	30	74	25	50	M30x1.5	26	M10	22.0	8	8	M10	15
	350	50	5	110	35	32	30	50	M35x1.5	28	M10	22.0	10	10	M12	18
	351	50	5/10/12/16/20/25	158	35	82	30	50	M35x1.5	26	M10	22.0	10	10	M12	18
	400	63	10/20/40	132	40	44	36	60	M40x1.5	28	M12	28.0	12	12	M12	18
	401	63	10/20/40	178	40	90	36	60	M40x1.5	28	M12	28.0	12	12	M12	18
	500	80	10/20/40	154	50	52	40	70	M50x1.5	32	M16	36.0	12	12	M16	24
	501	80	10/20/40	208	50	106	40	70	M50x1.5	32	M16	36.0	12	12	M16	24
	601	80	10/20/40	234	60	122	55	80	M60x2	32	M20	42.0	19	19	M20	30

1) The allocation of screw ends to the bearing assemblies is clearly defined by the version.
2) Version 173 only available in Form 81A

End bearings for screw ends Form 81, 81A, 82, 82A

Application

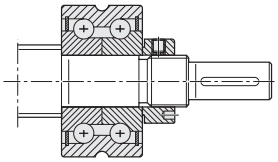

Separate technical dimensioning of the permissible drive torque is absolutely necessary.

Pillow block unit SEC-F assembly

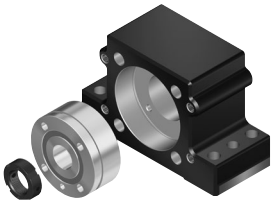

Pillow block unit SEB-F assembly

Pillow block unit SES-F assembly

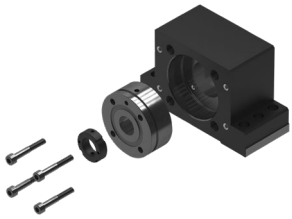

Bearing assembly LAF

Bearing assembly LAN

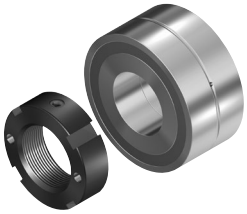

Bearing assembly LAL

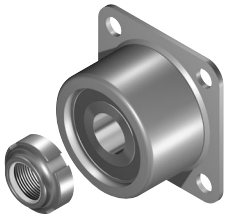

Bearing assembly LAS

Version[1]	Wrench size SW	b_{SW}	l_{SW}	Pillow block unit for motor attachment: SEC-F Part number	SEB-F Part number	SES-F Part number	Bearing assembly: LAF Part number	LAN Part number	LAL Part number	LAS Part number
060	9	10	8.5	–	R1591 106 20	–	–	R1590 106 00	–	–
061	9	10	8.5	–	–	–	–	–	R1590 406 00	–
100	11	10	8.5	–	R1591 110 20	–	–	R1590 110 00	–	–
104	11	10	8.5	–	–	–	–	–	–	R159A 410 01
120	15	10	42.0	R1594 012 00	R1591 112 20	R1595 012 20	R1590 012 00	R1590 112 00	–	–
122	15	10	8.5	–	–	–	–	–	R1590 412 00	–
123	15	10	8.5	–	R1591 112 20	–	R1590 012 00	R1590 112 00	–	–
124	15	10	8.5	–	–	–	–	–	–	R159A 412 01
151	19	10	10.5	–	–	–	–	–	R1590 415 00	–
170	19	10	42.0	–	R1591 117 30	R1595 017 20	R1590 017 30	R1590 117 30	–	–
173[2]	19	10	10.5	–	R1591 117 30	–	R1590 017 30	R1590 117 30	–	–
175	19	10	10.5	–	–	–	–	–	–	R159A 417 01[3]
200	24	15	10.5	–	R1591 120 30	–	R1590 020 30	R1590 120 30	–	–
203	24	15	40.0	R1594 020 00	–	R1595 020 20	R1590 020 00	R1590 120 00	–	–
204	24	15	10.5	–	–	–	–	–	R1590 420 00	–
206	24	15	10.5	–	–	–	–	–	–	R159A 420 01
250	30	15	12.5	–	R1591 225 30	–	R1590 325 30	R1590 225 30	–	–
300	30	15	12.5	–	R1591 130 30	–	R1590 030 30	R1590 130 30	–	–
301	30	15	45.0	R1594 030 00	–	R1595 030 20	–	–	–	–
302	30	15	37.0	–	–	R1595 330 20	–	–	–	–
305	30	15	37.0	–	–	–	–	–	–	–
306	41	22	15.5	–	R1591 230 30	–	R1590 330 30	R1590 230 30	–	–
309	30	15	12.5	–	–	–	–	–	–	R159A 430 01
350	41	22	15.5	–	R1591 135 30	–	R1590 035 30	R1590 135 30	–	–
351	41	22	15.5	–	–	–	–	–	–	R159A 435 01
400	50	27	16.5	–	R1591 140 30	–	R1590 040 30	R1590 140 30	–	–
401	50	27	16.5	–	–	–	–	–	–	R159A 440 01
500	60	27	18.5	–	R1591 150 30	–	R1590 050 30	R1590 150 30	–	–
501	60	27	18.5	–	–	–	–	–	–	R159A 450 01
601	60	27	18.5	–	–	–	–	–	–	R159A 460 01

3) LAS version 1+1 only for size 25 version 175.

Form 81, 81A, 82, 82A

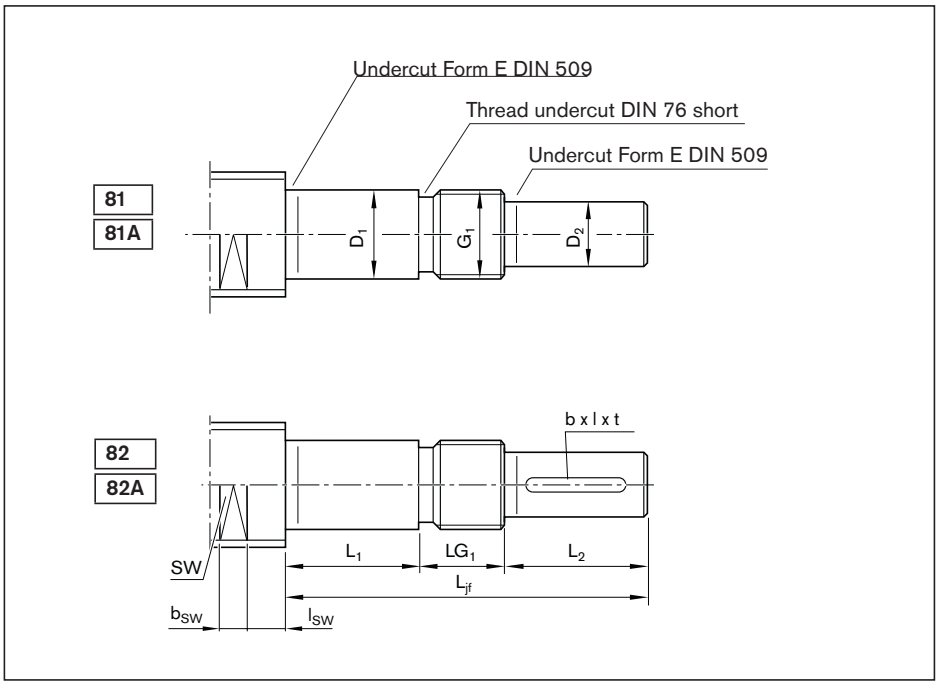

Option (machining of end face)	
K	None
Z	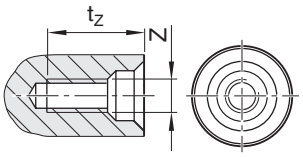
S	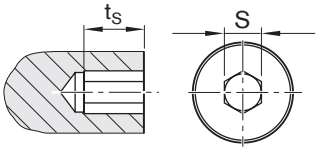
G	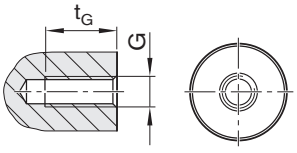

Ordering data:

BASA	20x5R x 3	SEM-E-S - 4	00	1	2	T7	R	82AZ120	41Z120	1250	0	1

Form	Version[1]	Size		(mm)							Keyway as per DIN 6885			Centering hole	
		d_0	P	L_{jf}	D_1 h6	L_1	D_2 h7	L_2	G_1	LG_1	b P9	l	t	Z	t_Z
82/82A	**100**	16	5/10/16	50	10	18	8	20	M10x1	12	2	14	1.2	M3	9.0
	104	16	5/10/16	66	10	34	8	20	M10x1	12	2	14	1.2	M3	9.0
	120	20	5/10/20/40	60	12	23	10	25	M12x1	12	3	20	1.8	M3	9.0
	123	20	5/10/20/40	60	12	23	10	25	M12x1	12	3	20	1.8	M3	9.0
	124	20	5/10/20/40	75	12	38	10	25	M12x1	12	3	20	1.8	M3	9.0
	170	25	5/10/25	75	17	23	15	30	M17x1	22	5	25	3.0	M5	12.5
	173[2]	25	5/10/25	75	17	23	15	30	M17x1	22	5	25	3.0	M5	12.5
	175	25	5/10/25	78	17	26	15	30	M17x1	22	5	25	3.0	M5	12.5
	200	32	5/10/20/32/64	88	20	26	18	40	M20x1	22	6	28	3.5	M6	16.0
	203	32	5/10/20/32/64	78	20	26	16	35	M20x1	17	5	28	3.0	M5	12.5
	206	32	5/10/20/32/64	116	20	54	18	40	M20x1	22	6	36	3.5	M6	16.0
	250	40	10/12/16/20/25/30/40	130	25	54	22	50	M25x1.5	26	6	36	3.5	M8	19.0
	300	40	5/10/12/16/20/25/30/40	101	30	25	25	50	M30x1.5	26	8	36	4.0	M10	22.0
	301	40	5/10/12/16/20/25/30/40	93	30	25	25	50	M30x1.5	18	8	36	4.0	M10	22.0
	302	40	10/12/16/20/25/30/40	130	30	54	25	50	M30x1.5	26	8	36	4.0	M10	22.0
	305	40	10/12/16/20/25/30/40	121	30	53	25	50	M30x1.5	18	8	36	4.0	M10	22.0
	306	50	10/12/16/20/25/30/40	130	30	54	25	50	M30x1.5	26	8	36	4.0	M10	22.0
	309	40	5/10/12/16/20/40	150	30	74	25	50	M30x1.5	26	8	36	4.0	M10	22.0
	350	50	5	110	35	32	30	50	M35x1.5	28	8	36	4.0	M10	22.0
	351	50	5/10/12/16/20/25	158	35	82	30	50	M35x1.5	26	8	36	4.0	M10	22.0
	400	63	10/20/40	132	40	44	36	60	M40x1.5	28	10	40	5.0	M12	28.0
	401	63	10/20/40	178	40	90	36	60	M40x1.5	28	10	40	5.0	M12	28.0
	500	80	10/20/40	154	50	52	40	70	M50x1.5	32	12	50	5.0	M16	36.0
	501	80	10/20/40	208	50	106	40	70	M50x1.5	32	12	50	5.0	M16	36.0
	601	80	10/20/40	234	60	122	55	80	M60x2	32	16	63	6.0	M20	42.0

1) The allocation of screw ends to the bearing assemblies is clearly defined by the version.
2) Version 173 only available in Form 81A
3) LAS version 1+1 only for size 25 version 175.

End bearings for screw ends Form 81, 81A, 82, 82A

Application

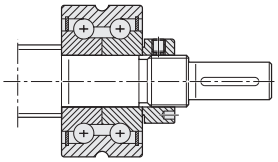

Separate technical dimensioning of the permissible drive torque is absolutely necessary.

Pillow block unit SEC-F assembly

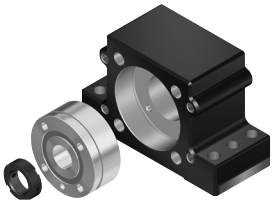

Pillow block unit SEB-F assembly

Pillow block unit SES-F assembly

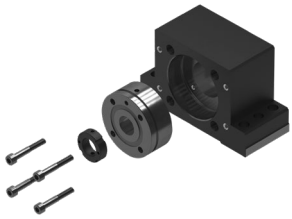

Bearing assembly LAF

Bearing assembly LAN

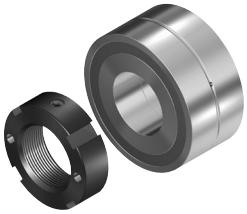

Bearing assembly LAL

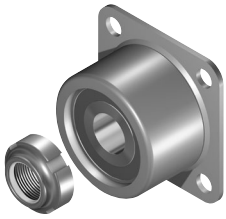

Bearing assembly LAS

Version[1]	Hex socket		Thread		Wrench size			Pillow block unit for motor attachment			Bearing assembly		
	S	t_S	G	t_g	SW	b_{SW}	l_{SW}	SEC-F Part number	SEB-F Part number	SES-F Part number	LAF Part number	LAN Part number	LAS Part number
100	–	–	M3	5	11	10	8.5	–	R1591 110 20	–	–	R1590110 00	–
104	–	–	M3	5	11	10	8.5	–	–	–	–	–	R159A 410 01
120	4	4	M4	6	15	10	42.0	R1594 012 00	R1591 112 20	R1595 012 20	R1590 012 00	R1590 112 00	–
123	4	4	M4	6	15	10	8.5	–	R1591 112 20	–	R1590 012 00	R1590 112 00	–
124	4	4	M4	6	15	10	8.5	–	–	–	–	–	R159A 412 01
170	4	4	M6	9	19	10	42.0	–	R1591 117 30	R1595 017 20	R1590 017 30	R1590 117 30	–
173[2]	4	4	M6	9	19	10	10.5	–	R1591 117 30	–	R1590 017 30	R1590 117 30	–
175	4	4	M6	9	19	10	10.5	–	–	–	–	–	R159A 417 01[3]
200	5	5	M6	9	24	15	10.5	–	R1591 120 30	–	R1590 020 30	R1590 120 30	–
203	4	4	M6	9	24	15	40.0	R1594 020 00	–	R1595 020 20	R1590 020 00	R1590 120 00	–
206	5	5	M6	9	24	15	10.5	–	–	–	–	–	R159A 420 01
250	6	6	M8	12	30	15	12.5	–	R1591 225 30	–	R1590 325 30	R1590 225 30	–
300	8	8	M10	15	30	15	12.5	–	R1591 130 30	–	R1590 030 30	R1590 130 30	–
301	8	8	M10	15	30	15	45.0	R1594 030 00	–	R1595 030 20	–	–	–
302	8	8	M10	15	30	15	37.0	–	–	R1595 330 20	–	–	–
305	8	8	M10	15	30	15	37.0	–	–	–	–	–	–
306	8	8	M10	15	41	22	15.5	–	R1591 230 30	–	R1590 330 30	R1590 230 30	–
309	8	8	M10	15	30	15	12.5	–	–	–	–	–	R159A 430 01
350	10	10	M12	18	41	22	15.5	–	R1591 135 30	–	R1590 035 30	R1590 135 30	–
351	10	10	M12	18	41	22	15.5	–	–	–	–	–	R159A 435 01
400	12	12	M12	18	50	27	16.5	–	R1591 140 30	–	R1590 040 30	R1590 140 30	–
401	12	12	M12	18	50	27	16.5	–	–	–	–	–	R159A 440 01
500	12	12	M16	24	60	27	18.5	–	R1591 150 30	–	R1590 050 30	R1590 150 30	–
501	12	12	M16	24	60	27	18.5	–	–	–	–	–	R159A 450 01
601	19	19	M20	30	60	27	18.5	–	–	–	–	–	R159A 460 01

Form 831, 83, 83A, 841, 84, 84A

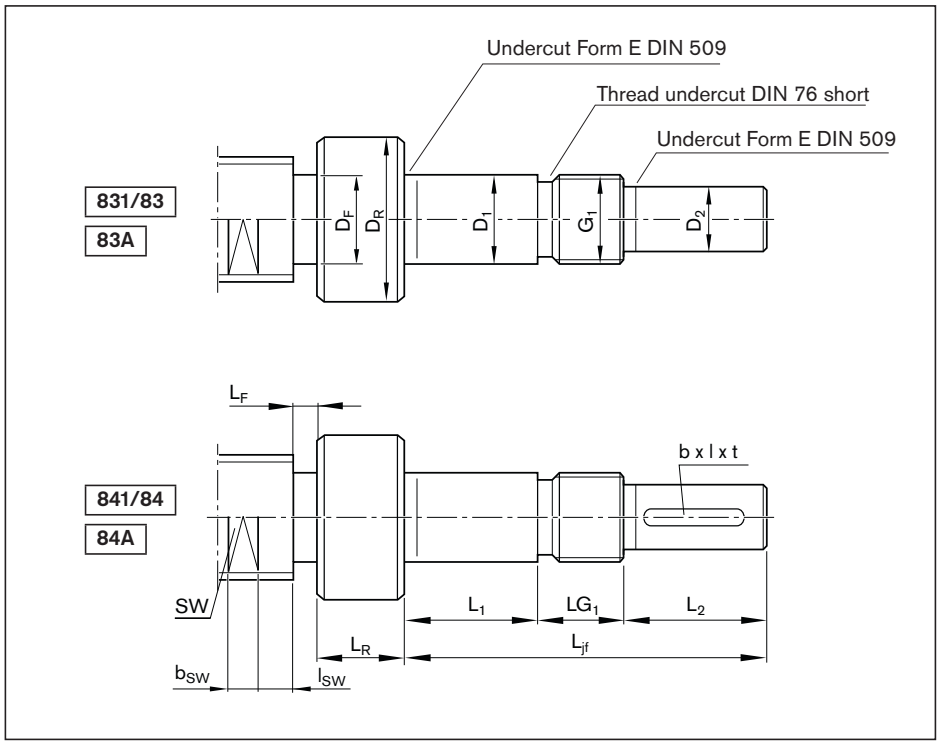

Option (machining of end face)	
K	None
Z	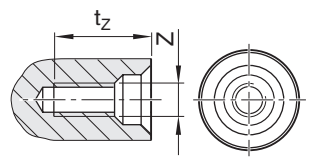
S	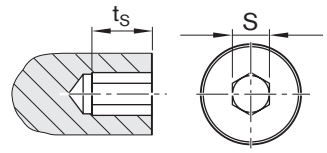
G	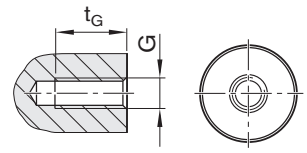

Ordering data:

BASA	20x5R x 3	SEM-E-S - 4	00	1	2	T7	R	83Z200	51Z120	1250	0	1

Form	Version[1)]	Size		(mm)													
															Centering hole	
		d_0	P	L_{jf}	D_1 h6	L_1	D_2 h7	L_2	G_1	LG_1	D_R	L_R	D_F	L_F	Z	t_Z
831	**060**	6	1/2	40	6	14	5	16	M6x0.5	10	12	15	5.0	1	–	–
	061	6	1/2	41	6	10	5	16	M6x0.5	15	12	15	5.0	1	–	–
	062	8	1/2/2.5/5	41	6	10	5	16	M6x0.5	15	12	15	6.0	1	–	–
	065	8	1/2/2,5/5	40	6	14	5	16	M6x0.5	10	12	15	6.0	1	–	–
	120	12	2/5/10	60	12	23	10	25	M12x1	12	16	15	8.0	1	M3	9.0
	121	12	2/5/10	60	12	17	10	25	M12x1	18	15	15	8.0	1	M3	9.0
	122	16	5/10/16	60	12	17	10	25	M12x1	18	18	17	12.0	1	M3	9.0
	170	16	5/10/16	75	17	23	15	30	M17x1	22	23	17	12.0	1	M5	12.5
83/83A	**200**	20	5/10/20	88	20	26	18	40	M20x1	22	25	15	16.5	8	M6	16.0
	250	25	5/10/25	102	25	26	22	50	M25x1.5	26	32	15	21.0	8	M8	19.0
	300	32	5/10/20/32	101	30	25	25	50	M30x1.5	26	40	20	28.0	8	M10	22.0
	400	40	5/10/12/16/20	132	40	44	36	60	M40x1.5	28	50	20	33.5	8	M12	28.0
	500	50	10/12/20	154	50	52	40	70	M50x1.5	32	60	20	43.5	10	M16	36.0
841	**120**	12	2/5/10	60	12	23	10	25	M12x1	12	16	15	8.0	1	M3	9.0
	170	16	5/10/16	75	17	23	15	30	M17x1	22	23	17	12.0	1	M5	12.5
84/84A	**200**	20	5/10/20	88	20	26	18	40	M20x1	22	25	15	16.5	8	M6	16.0
	250	25	5/10/25	102	25	26	22	50	M25x1.5	26	32	15	21.0	8	M8	19.0
	300	32	5/10/20/32	101	30	25	25	50	M30x1.5	26	40	20	28.0	8	M10	22.0
	400	40	5/10/12/16/20/40	132	40	44	36	60	M40x1.5	28	50	20	33.5	8	M12	28.0
	500	50	10/12/20	154	50	52	40	70	M50x1.5	32	60	20	43.5	10	M16	36.0

1) The allocation of screw ends to the bearing assemblies is clearly defined by the version.

End bearings for screw ends Form 831, 83, 83A, 841, 84, 84A

Bearing assembly LAF

Shown with slotted nut NMA

Bearing assembly LAN

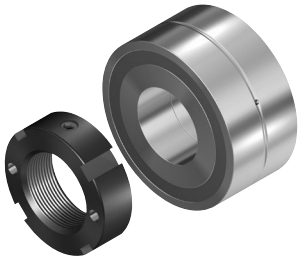

Shown with slotted nut NMZ

Application

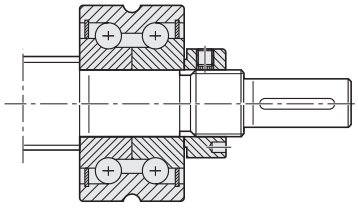

Separate technical dimensioning of the permissible drive torque is absolutely necessary.

Bearing assembly LAL

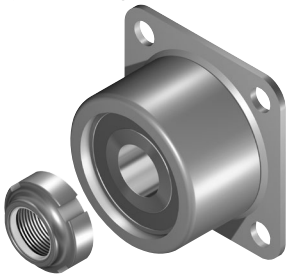

Shown with slotted nut NMG

Pillow block unit SEB-F assembly

								Keyway as per DIN 6885			Bearing assembly			
Version[1)]	Hex socket		Thread		Wrench size									Pillow block unit
	S	t_S	G	t_G	SW	b_{SW}	l_{SW}	b	l	t	LAF	LAN	LAL	SEB-F
								P9			Part number	Part number	Part number	Part number
060	–	–	–	–	–	–	–	–	–	–	–	–	–	R1591 106 20
061	–	–	–	–	–	–	–	–	–	–	–	–	R1590 406 00	–
062	–	–	–	–	–	–	–	–	–	–	–	–	R1590 406 00	–
065	–	–	–	–	–	–	–	–	–	–	–	R1590 106 00	–	–
120	4	4	M4	6	–	–	–	–	–	–	–	R1590 112 00	–	R1591 112 20
121	4	4	M4	6	–	–	–	–	–	–	–	–	R1590 412 00	–
122	4	4	M4	6	–	–	–	–	–	–	–	–	R1590 412 00	–
170	4	4	M6	9	–	–	–	–	–	–	R1590 017 30	R1590 117 30	–	R1591 117 30
200	5	5	M6	9	15	10	8.5	–	–	–	R1590 020 30	R1590 120 30	–	R1591 120 30
250	6	6	M8	12	19	10	10.5	–	–	–	–	–	–	–
300	8	8	M10	15	24	15	10.5	–	–	–	R1590 030 30	R1590 130 30	–	R1591 130 30
400	12	12	M12	18	30	15	12.5	–	–	–	R1590 040 30	R1590 140 30	–	R1591 140 30
500	12	12	M16	24	41	22	15.5	–	–	–	R1590 050 30	R1590 150 30	–	R1591 150 30
120	4	4	M4	6	–	–	–	3	20	1.8	–	R1590 112 00	–	R1591 112 20
170	4	4	M6	9	–	–	–	5	25	3.0	R1590 017 30	R1590 117 30	–	R1591 117 30
200	5	5	M6	9	15	10	8.5	6	28	3.5	R1590 020 30	R1590 120 30	–	R1591 120 30
250	6	6	M8	12	19	10	10.5	6	36	3.5	–	–	–	–
300	8	8	M10	15	24	15	10.5	8	36	4.0	R1590 030 30	R1590 130 30	–	R1591 130 30
400	12	12	M12	18	30	15	12.5	10	40	5.0	R1590 040 30	R1590 140 30	–	R1591 140 30
500	12	12	M16	24	41	22	15.5	12	50	5.0	R1590 050 30	R1590 150 30	–	R1591 150 30

Form 91, 91A, 92, 92A

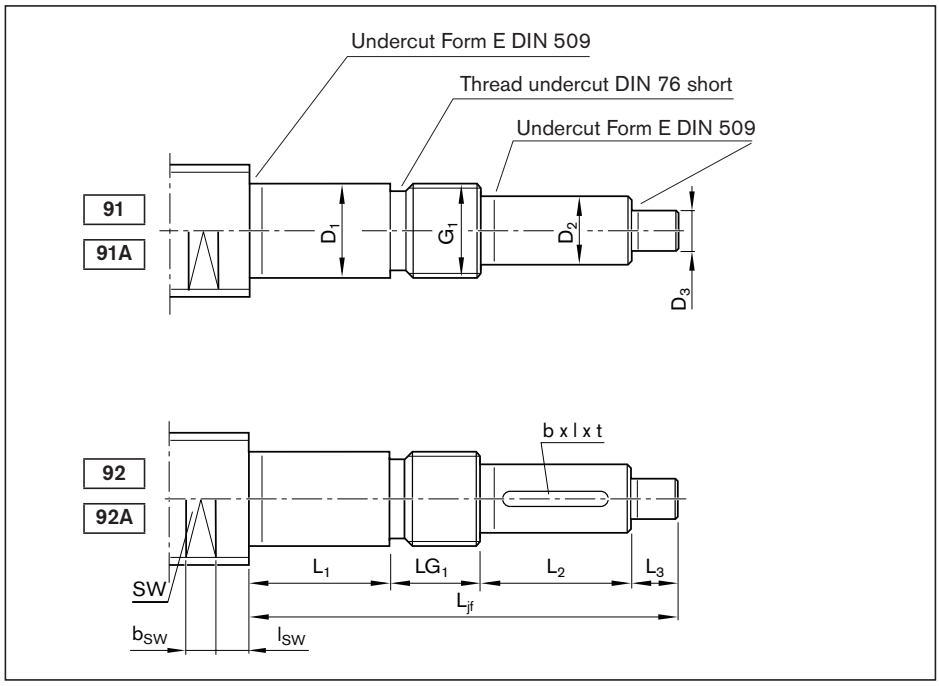

Option (machining of end face)	
K	None

Ordering data:

BASA	20x5R x 3	SEM-E-S - 4	00	1	2	T7	R	92AK120	41Z120	1250	0	1

Form	Version[1]	Size		(mm)								
		d_0	P	L_{jf}	D_1 h6	L_1	D_2 h7	L_2	D_3 h7	L_3	G_1	LG_1
91/91A	060	12	2/5/10	50	6	14	5	16	4	10	M6x0.5	10
	100	16	5/10/16	60	10	18	8	20	4	10	M10x1	12
	120	20	5/10/20/40	75	12	23	10	25	6	15	M12x1	12
	170	25	5/10/25	90	17	23	15	30	6	15	M17x1	22
	200	32	5/10/20/32/64	103	20	26	18	40	6	15	M20x1	22
	250	40	10/12/16/20/25/30/40	145	25	54	22	50	6	15	M25x1.5	26
	300	40	5/10/12/16/20/25/30/40	116	30	25	25	50	6	15	M30x1.5	26
	301	50	10/12/16/20/25/30/40	145	30	54	25	50	6	15	M30x1.5	26
	350	50	5	125	35	32	30	50	6	15	M35x1.5	28
	400	63	10/20/40	147	40	44	36	60	6	15	M40x1.5	28
	500	80	10/20/40	169	50	52	40	70	6	15	M50x1.5	32
92/92A	100	16	5/10/16	60	10	18	8	20	4	10	M10x1	12
	120	20	5/10/20/40	75	12	23	10	25	6	15	M12x1	12
	170	25	5/10/25	90	17	23	15	30	6	15	M17x1	22
	200	32	5/10/20/32/64	103	20	26	18	40	6	15	M20x1	22
	250	40	10/12/16/20/25/30/40	145	25	54	22	50	6	15	M25x1.5	26
	300	40	5/10/12/16/20/25/30/40	116	30	25	25	50	6	15	M30x1.5	26
	301	50	10/12/16/20/25/30/40	145	30	54	25	50	6	15	M30x1.5	26
	350	50	5	125	35	32	30	50	6	15	M35x1.5	28
	400	63	10/20/40	147	40	44	36	60	6	15	M40x1.5	28
	500	80	10/20/40	169	50	52	40	70	6	15	M50x1.5	32

1) The allocation of screw ends to the bearing assemblies is clearly defined by the version.

End bearings for screw ends Form 91, 91A, 92, 92A

Pillow block unit SEB-F assembly

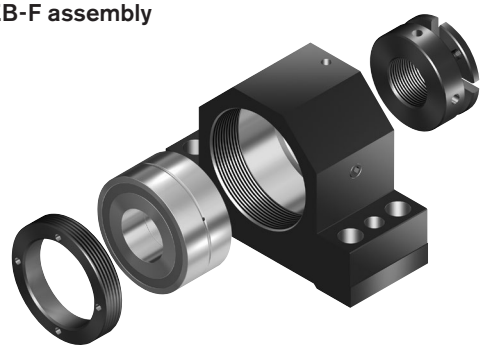

Application

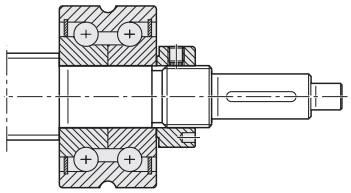

Separate technical dimensioning of the permissible drive torque is absolutely necessary.

Bearing assembly LAF

Shown with slotted nut NMA

Bearing assembly LAN

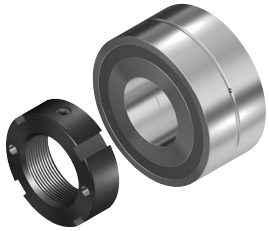

Shown with slotted nut NMZ

	Version[1)]	Keyway as per DIN 6885			Wrench size			Module		
								Pillow block unit	Bearing	
		b	l	t	SW	b_{SW}	l_{SW}	SEB-F	LAF	LAN
		P9						Part number	Part number	Part number
	060	–	–	–	9	10	8.5	R1591 106 20	–	R1590 106 00
	100	–	–	–	11	10	8.5	R1591 110 20	–	R1590 110 00
	120	–	–	–	15	10	8.5	R1591 112 20	R1590 012 00	R1590 112 00
	170	–	–	–	19	10	10.5	R1591 117 30	R1590 017 30	R1590 117 30
	200	–	–	–	24	15	10.5	R1591 120 30	R1590 020 30	R1590 120 30
	250	–	–	–	30	15	12.5	R1591 225 30	R1590 325 30	R1590 225 30
	300	–	–	–	30	15	12.5	R1591 130 30	R1590 030 30	R1590 130 30
	301	–	–	–	41	22	15.5	R1591 230 30	R1590 330 30	R1590 230 30
	350	–	–	–	41	22	15.5	R1591 135 30	R1590 035 30	R1590 135 30
	400	–	–	–	50	27	16.5	R1591 140 30	R1590 040 30	R1590 140 30
	500	–	–	–	60	27	18.5	R1591 150 30	R1590 050 30	R1590 150 30
	100	2	14	1.2	11	10	8.5	R1591 110 20	–	R1590 110 00
	120	3	20	1.8	15	10	8.5	R1591 112 20	R1590 012 00	R1590 112 00
	170	5	25	3.0	19	10	10.5	R1591 117 30	R1590 017 30	R1590 117 30
	200	6	28	3.5	24	15	10.5	R1591 120 30	R1590 020 30	R1590 120 30
	250	6	36	3.5	30	15	12.5	R1591 225 30	R1590 325 30	R1590 225 30
	300	8	36	4.0	30	15	12.5	R1591 130 30	R1590 030 30	R1590 130 30
	301	8	36	4.0	41	22	15.5	R1591 230 30	R1590 330 30	R1590 230 30
	350	8	36	4.0	41	22	15.5	R1591 135 30	R1590 035 30	R1590 135 30
	400	10	40	5.0	50	27	16.5	R1591 140 30	R1590 040 30	R1590 140 30
	500	12	50	5.0	60	27	18.5	R1591 150 30	R1590 050 30	R1590 150 30

Form 931, 93, 93A, 941, 94, 94A

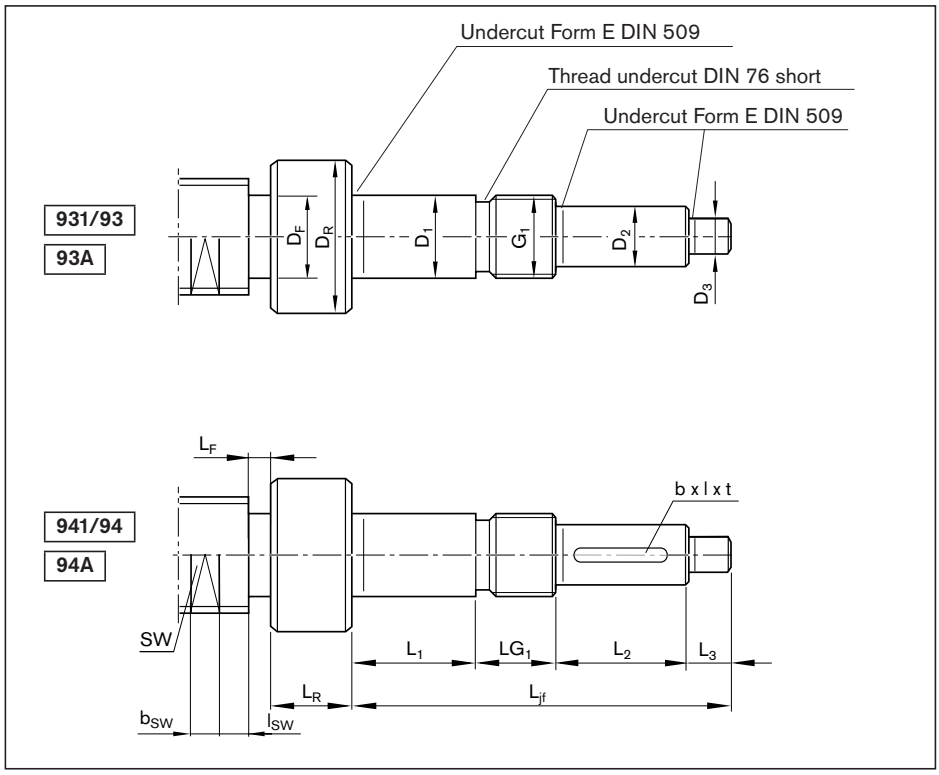

Option (machining of end face)	
K	None

Ordering data:

BASA	20x5R x 3	SEM-E-S - 4	00	1	2	T7	R	93K200	41Z120	1250	0	1

Form	Version[1)]	Size		(mm)												
		d_0	P	L_{jf}	D_1 h6	L_1	D_2 h7	L_2	D_3 h7	L_3	G_1	LG_1	D_R	L_R	D_F	$L_{F\,max}$
931	**060**	8	1/2/2.5/5	50	6	14	5	16	4	10	M6x0.5	10	12	15	6.0	1
	120	12	2/5/10	75	12	23	10	25	6	15	M12x1	12	16	15	8.0	1
	170	16	5/10/16	90	17	23	15	30	6	15	M17x1	22	23	17	12.0	1
93/93A	**200**	20	5/10/20	103	20	26	18	40	6	15	M20x1	22	25	15	16.5	8
	250	25	5/10/25	117	25	26	22	50	6	15	M25x1.5	26	32	15	21.0	8
	300	32	5/10/20/32	116	30	25	25	50	6	15	M30x1.5	26	40	20	28.0	8
	400	40	5/10/12/16/20	147	40	44	36	60	6	15	M40x1.5	28	50	20	33.5	8
	500	50	10/12/20	169	50	52	40	70	6	15	M50x1.5	32	60	20	43.5	10
941	**120**	12	2/5/10	75	12	23	10	25	6	15	M12x1	12	16	15	8.0	1
	170	16	5/10/16	90	17	23	15	30	6	15	M17x1	22	23	17	12.0	1
94/94A	**200**	20	5/10/20	103	20	26	18	40	6	15	M20x1	22	25	15	16.5	8
	250	25	5/10/25	117	25	26	22	50	6	15	M25x1.5	26	32	15	21.0	8
	300	32	5/10/20/32	116	30	25	25	50	6	15	M30x1.5	26	40	20	28.0	8
	400	40	5/10/12/16/20	147	40	44	36	60	6	15	M40x1.5	28	50	20	33.5	8
	500	50	10/12/20	169	50	52	40	70	6	15	M50x1.5	32	60	20	43.5	10

1) The allocation of screw ends to the bearing assemblies is clearly defined by the version.

End bearings for screw ends Form 931, 93, 93A, 941, 94, 94A

Pillow block unit SEB-F assembly

Application

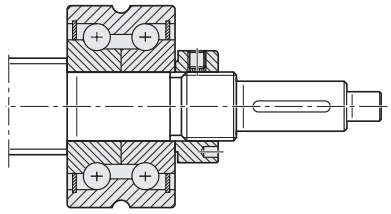

Separate technical dimensioning of the permissible drive torque is absolutely necessary.

Bearing assembly LAF

Shown with slotted nut NMA

Bearing assembly LAN

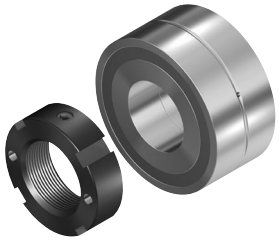

Shown with slotted nut NMZ

	Version[1)]	Keyway as per DIN 6885			Wrench size			Module Pillow block unit	Bearing	
		b	l	t	SW	b_{SW}	l_{SW}	SEB-F	LAF	LAN
		P9						Part number	Part number	Part number
	060	–	–	–	–	–	–	R1591 106 20	–	R1590 106 00
	120	–	–	–	–	–	–	R1591 112 20	–	R1590 112 00
	170	–	–	–	–	–	–	R1591 117 30	R1590 017 30	R1590 117 30
	200	–	–	–	15	10	8.5	R1591 120 30	R1590 020 30	R1590 120 30
	250	–	–	–	19	10	10.5	–	–	–
	300	–	–	–	24	15	10.5	R1591 130 30	R1590 030 30	R1590 130 30
	400	–	–	–	30	15	12.5	R1591 140 30	R1590 040 30	R1590 140 30
	500	–	–	–	41	22	15.5	R1591 150 30	R1590 050 30	R1590 150 30
	120	3	20	1.8	–	–	–	R1591 112 20	–	R1590 112 00
	170	5	25	3.0	–	–	–	R1591 117 30	R1590 017 30	R1590 117 30
	200	6	28	3.5	15	10	8.5	R1591 120 30	R1590 020 30	R1590 120 30
	250	6	36	3.5	19	10	10.5	–	–	–
	300	8	36	4.0	24	15	10.5	R1591 130 30	R1590 030 30	R1590 130 30
	400	10	40	5.0	30	15	12.5	R1591 140 30	R1590 040 30	R1590 140 30
	500	12	50	5.0	41	22	15.5	R1591 150 30	R1590 050 30	R1590 150 30

Form N1, N1A, N2, N2A

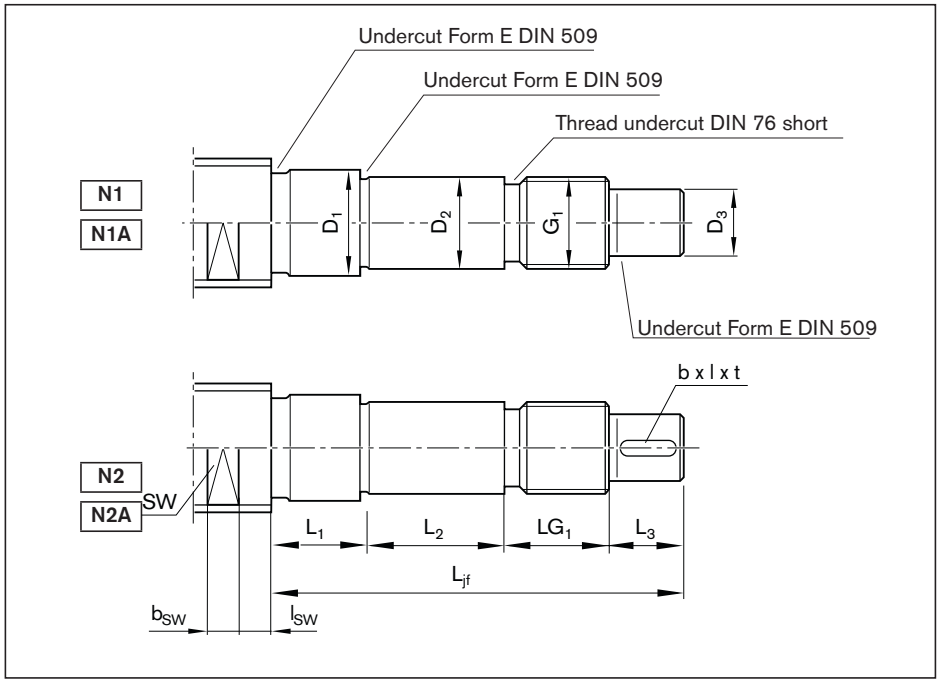

Option (machining of end face)	
K	None
Z	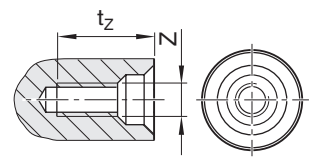
S	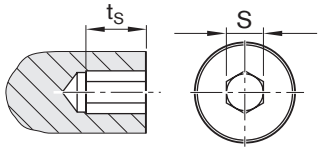
G	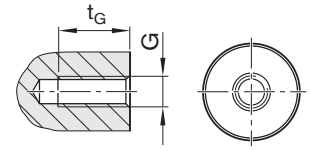

Ordering data:

BASA	25x5R x 3	SEM-E-S - 4	00	1	2	T7	R	A1K170	41Z170	1250	0	1

Form	Version[1)]	Size		(mm)								
		d_0	P	L_{jf}	D_1 h11	L_1	D_2 h6	L_2	D_3 h7	L_3	G_1	LG_1
N1/N1A	**170**	25	5/10/25	85	21.0	10	17	23	15	30	M17x1	22
	200	32	5/10/20/32	98	27.5	10	20	26	18	40	M20x1	22
	250	40	10/12/16/20/25/30/40	140	33.5	10	25	54	22	50	M25x1.5	26
	300	40	5	111	36.0	10	30	25	25	50	M30x1.5	26
	301	50	10/12/16/20/25/30/40	103	43.0	10	30	25	25	50	M30x1.5	18
	350	50	5	120	46.0	10	35	32	30	50	M35x1.5	28
	400	63	10/20/40	142	56.0	10	40	44	36	60	M40x1.5	28
	500	80	10/20/40	164	66.5	10	50	52	40	70	M50x1.5	32
N2/N2A	**170**	25	5/10/25	85	21.0	10	17	23	15	30	M17x1	22
	200	32	5/10/20/32	98	27.5	10	20	26	18	40	M20x1	22
	250	40	10/12/16/20/25/30/40	140	33.5	10	25	54	22	50	M25x1.5	26
	300	40	5	111	36.0	10	30	25	25	50	M30x1.5	26
	301	50	10/12/16/20/25/30/40	103	43.0	10	30	25	25	50	M30x1.5	18
	350	50	5	120	46.0	10	35	32	30	50	M35x1.5	28
	400	63	10/20/40	142	56.0	10	40	44	36	60	M40x1.5	28
	500	80	10/20/40	164	66.5	10	50	52	40	70	M50x1.5	32

1) The allocation of screw ends to the bearing assemblies is clearly defined by the version.

Separate technical dimensioning of the permissible drive torque is absolutely necessary.

Version[1)]	Keyway			Centering hole		Hex socket		Thread		Wrench size		
	b P9	l	t	Z	t_z	S	t_s	G	t_g	SW	b_{SW}	l_{SW}
170	–	–	–	M5	12.5	4	4	M6	9	19	10	10.5
200	–	–	–	M6	16.0	5	5	M6	9	24	15	10.5
250	–	–	–	M8	19.0	6	6	M8	12	30	15	12.5
300	–	–	–	M10	22.0	8	8	M10	15	30	15	12.5
301	–	–	–	M10	22.0	8	8	M10	15	41	22	15.5
350	–	–	–	M10	22.0	10	10	M12	18	41	22	15.5
400	–	–	–	M12	28.0	12	12	M12	18	50	27	16.5
500	–	–	–	M16	36.0	12	12	M16	24	60	27	18.5
170	5	25	3.0	M5	12.5	4	4	M6	9	19	10	10.5
200	6	28	3.5	M6	16.0	5	5	M6	9	24	15	10.5
250	6	36	3.5	M8	19.0	6	6	M8	12	30	15	12.5
300	8	36	4.0	M10	22.0	8	8	M10	15	30	15	12.5
301	8	36	4.0	M10	22.0	8	8	M10	15	41	22	15.5
350	8	36	4.0	M10	22.0	10	10	M12	18	41	22	15.5
400	10	40	5.0	M12	28.0	12	12	M12	18	50	27	16.5
500	12	50	5.0	M16	36.0	12	12	M16	24	60	27	18.5

Overview

Rexroth offers an extensive range of accessories for ball screw assemblies.
These include nut housings, pillow block units, bearings, slotted nuts, and front lube units.
A reasonable ratio of the load capacities of the bearing and the ball screw drive should be taken into account when dimensioning. Further information is provided in this section.

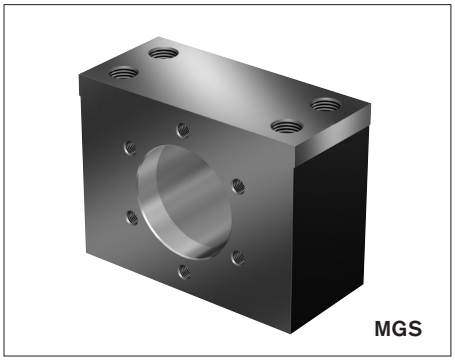

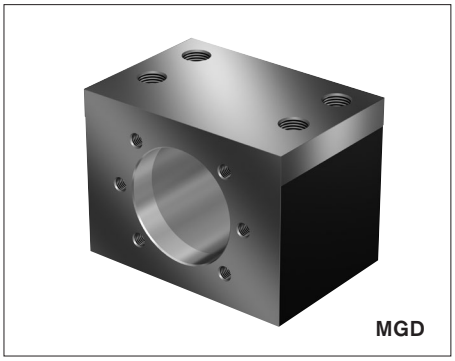

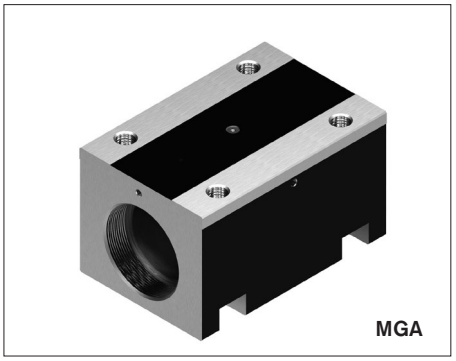

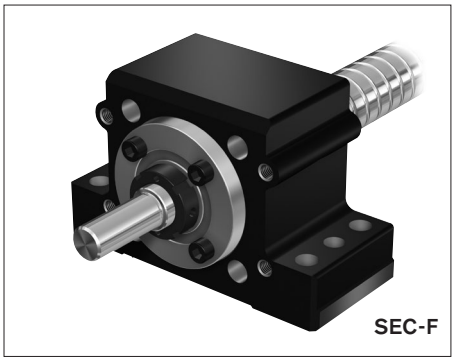

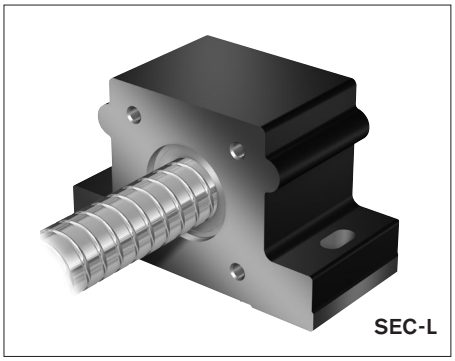

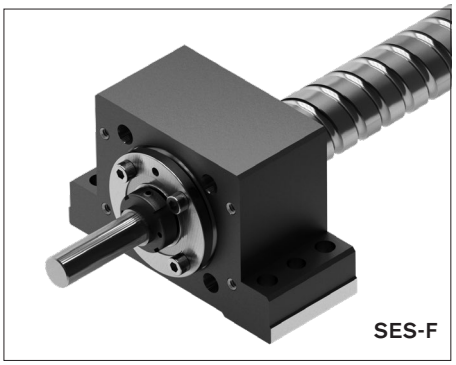

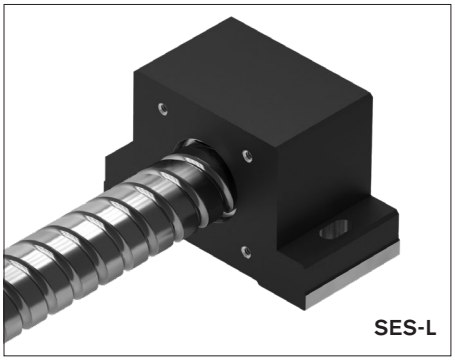

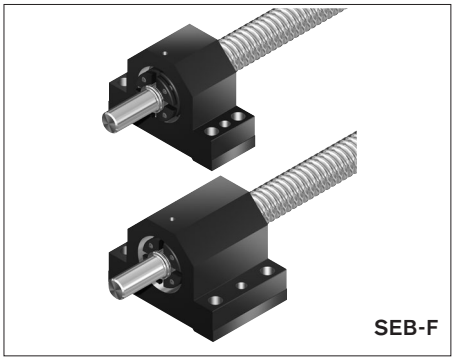

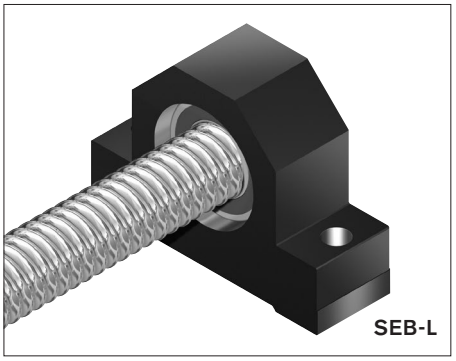

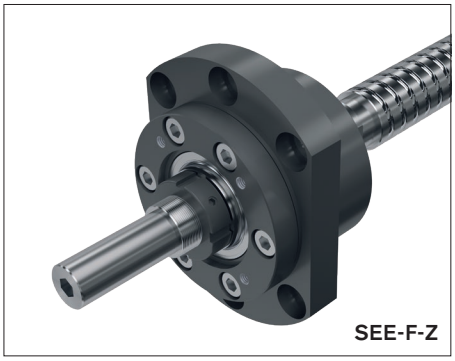

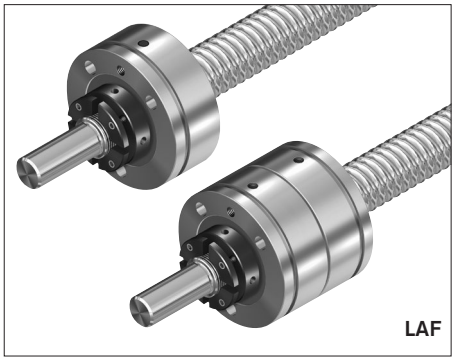
LAF

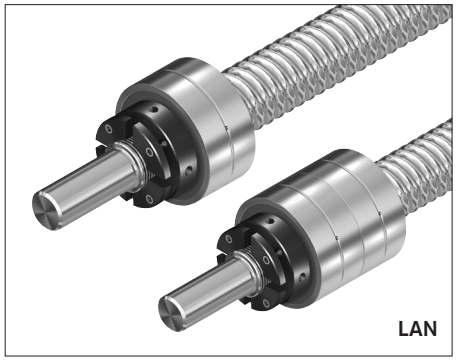
LAN

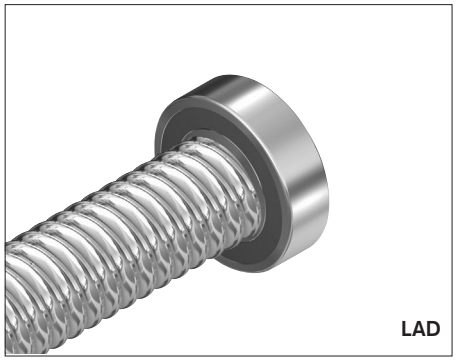
LAD

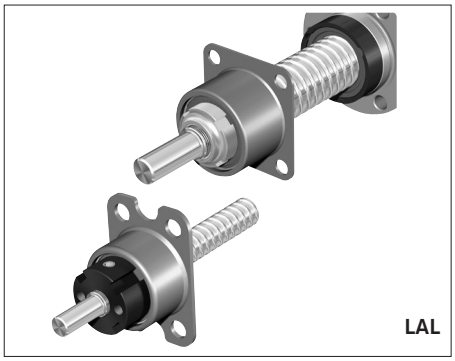
LAL

LAS

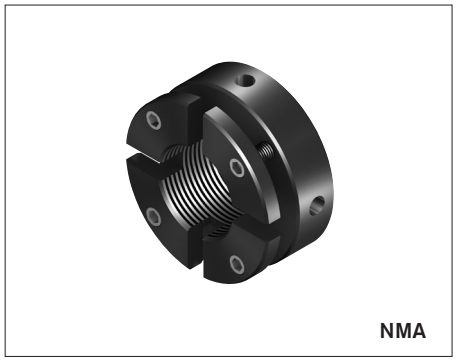
NMA

VSE

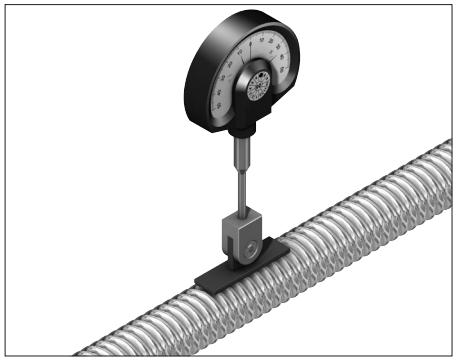

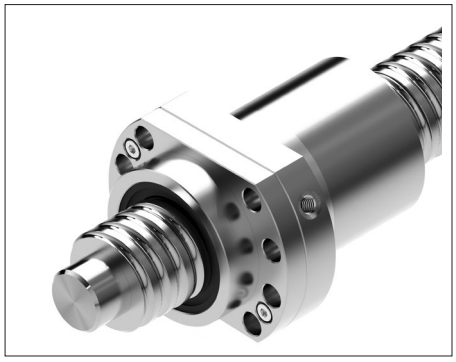

Nut housing MGS

Steel nut housings MGS are designed for FEM-E-S, FDM-E-S, FEP-E-S and SEM-E-S nuts

In addition to bolting, the housings should be locked in place by positive means (e.g. two pins with a diameter equal to that of the screws S_2).
We recommend using screws with a strength class of 8.8.

Tightening torque
see “Installation in the machine” on page 147

Reference edges are formed on both sides.

⚠ **If a ball screw assembly with a front lube unit is used, the front lube unit may project beyond the housing. This must be considered when calculating the stroke.**

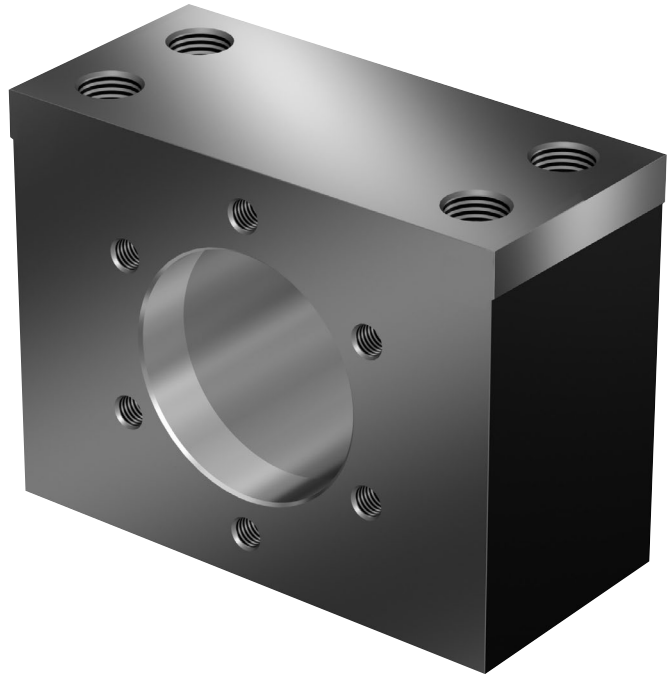

Size d_0 x P x D_w	Part number	Mass (kg)	Hole pattern FEM-E-B / FEM-E-S / FEP-E-S	 SEM-E-S	Hex socket cap screw ISO 4762
16x5R/L x 3	R1506 000 20	0.850	BB3	BB7	M8
16x10R x 3					
16x16R x 3	R1506 100 20	1.050	BB4	BB7	M8
20x5R/L x 3					
20x10R x 3					
20x20R x 3.5	R1506 200 20	1.178	BB4	BB7	M8
20x40R x 3.5					
25x5R/L x 3					
25x10R x 3					
25x25R x 3.5	R1506 300 20	1.746	BB4	BB7	M10
32x5R/L x 3.5					
32x10R x 3.969					
32x20R x 3.969	R1506 400 20	2.367	BB4	BB7	M12
32x32R x 3.969					
32x64R x 3.969					
40x5R/L x 3.5					
40x10R/L x 6	R1506 400 21	3.587	BB4	BB7	M14
40x20R x 6					
40x40R x 6	R1506 500 21	6.187	BB4	BB7	M16
50x5R x 3.5	R1506 500 20	4.000	BB4	BB7	M14
50x10R x 6 **50x16R x 6**	R1506 500 21	6.187	BB4	BB7	M16
50x20R x 6.5	R1506 600 20	7.173	BB4	BB7	M16
50x40R x 6.5					
63x10R x 6					
80x10R x 6.5	R1506 700 20	9.334	BB4	BB7	M16

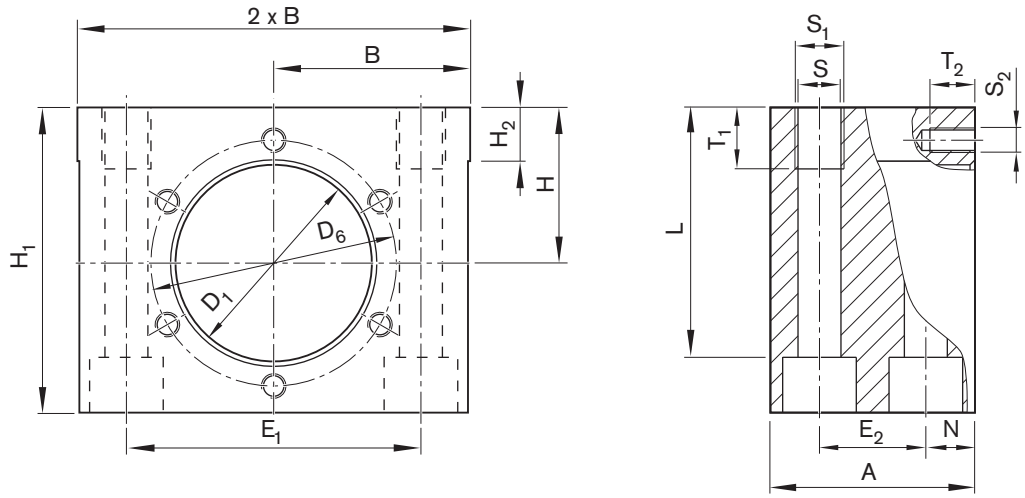

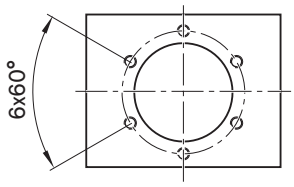

BB4/BB7

for size 16x5/16x10

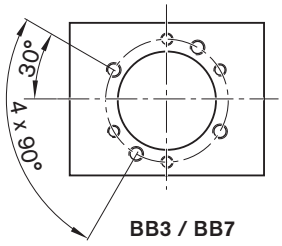

BB3 / BB7

Size d_0 x P x D_w	(mm) D_1 H7	D_6	A	B ±0.01	H ±0.01	H_1	H_2	E_1	E_2	N	S	S_1	T_1	S_2	T_2	Clamping length L
16x5R/L x 3	28	40	40	35.0	28	55	10	$52^{\pm 0.1}$	$20^{\pm 0.1}$	10	8.4	M10	15	M6	10	44.0
16x10R x 3																
16x16R x 3	33	45	40	37.5	32	62	10	$56^{\pm 0.1}$	$20^{\pm 0.1}$	10	8.4	M10	15	M6	10	51.0
20x5R/L x 3																
20x10R x 3																
20x20R x 3.5	38	50	40	42.5	34	65	10	$63^{\pm 0.1}$	$20^{\pm 0.1}$	10	8.4	M10	15	M6	10	54.0
20x40R x 3.5																
25x5R/L x 3																
25x10R x 3																
25x25R x 3.5	48	60	50	47.5	38	75	10	$72^{\pm 0.1}$	$26^{\pm 0.1}$	12	10.5	M12	15	M6	10	61.0
32x5R/L x 3.5																
32x10R x 3.969																
32x20R x 3.969	56	68	60	52.5	42	82	12	$82^{\pm 0.1}$	$30^{\pm 0.1}$	15	13.0	M16	20	M6	12	64.0
32x32R x 3.969																
32x64R x 3.969																
40x5R/L x 6																
40x10R/L x 6	63	78	65	60.0	50	98	12	$93^{\pm 0.1}$	$35^{\pm 0.1}$	15	15.0	M18	25	M8	14	79.5
40x20R x 6																
40x40R x 6	72	90	80	70.0	58	113	12	$108^{\pm 0.15}$	$46^{\pm 0.15}$	17	17.0	M20	30	M10	18	92.0
50x5R x 3.5	68	82	65	65.0	52	101	12	$100^{\pm 0.15}$	$35^{\pm 0.15}$	15	15.0	M18	30	M8	14	82.5
50x10R x 6 **50x16R x 6**	72	90	80	70.0	58	113	12	$108^{\pm 0.15}$	$46^{\pm 0.15}$	17	17.0	M20	30	M10	18	92.0
50x20R x 6.5	85	105	80	75.0	65	128	15	$121^{\pm 0.15}$	$46^{\pm 0.15}$	17	17.0	M20	30	M10	18	107.0
50x40R x 6.5																
63x10R x 6																
80x10R x 6.5	105	125	80	85.0	78	153	15	$140^{\pm 0.20}$	$46^{\pm 0.15}$	17	17.0	M20	30	M12	20	132.0

Nut housing MGD

Steel nut housings MGD are designed for FEM-E-B, FDM-E-B, SEM-E-C and FED-E-B nuts

In addition to bolting, the housings should be locked in place by positive means (for example, two pins with a diameter equal to that of the screws).
We recommend using screws with a strength class of 8.8.

Tightening torque
see “Installation in the machine” on page 147

Reference edges are formed on both sides.

⚠ If a ball screw assembly with a front lube unit is used, the front lube unit may project beyond the housing. This must be considered when calculating the stroke.

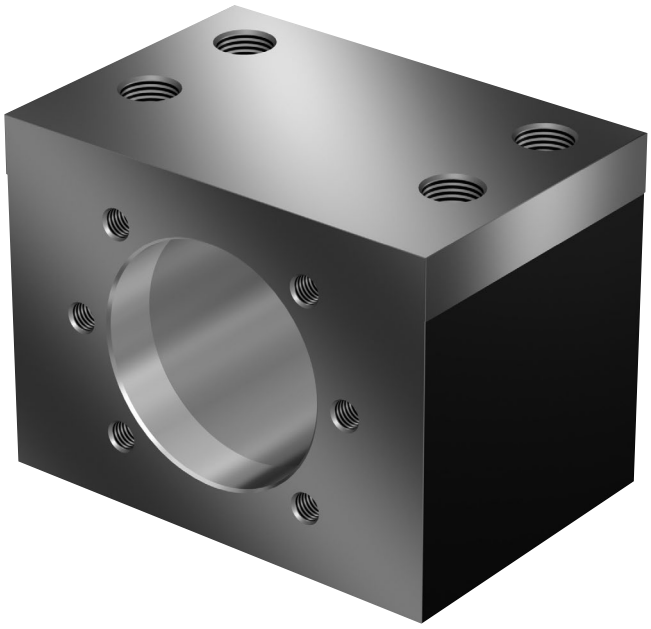

Size d_0 x P x D_w	Part number	Mass (kg)	Hole pattern	Hex socket cap screw ISO 4762
16 x 5R/L x 3	R1506 000 50	0.91	BB2	M8
16 x 10R x 3				
16 x 16R x 3				
20 x 5R/L x 3	R1506 100 50	1.18	BB2	M8
20 x 10R x 3				
20 x 20R x 3.5				
25 x 5R/L x 3	R1506 200 50	1.33	BB2	M8
25 x 10R x 3				
25 x 25R x 3.5				
32 x 5R/L x 3.5	R1506 300 50	2.27	BB2	M12
32 x 10R x 3.969				
32 x 20R x 3.969				
32 x 32R x 3.969				
40 x 5R/L x 3.5	R1506 400 50	3.61	BB1	M14
40 x 10R/L x 6				
40 x 12R x 6				
40 x 16R x 6				
40 x 20R x 6				
40 x 25R x 6				
40 x 30R x 6				
40 x 40R x 6				
50 x 5R x 3.5	R1506 500 50	5.63	BB1	M16
50 x 10R x 6				
50 x 12R x 6				
50 x 16R x 6				
50 x 20R x 6.5				
50 x 25R x 6.5				
50 x 30R x 6.5				
50 x 40R x 6.5				
63 x 10R x 6	R1506 600 50	6.72	BB1	M16
63 x 20R x 6.5	R1506 600 51	7.67	BB1	M16
63 x 40R x 6.5				
80 x 10R x 6.5	R1506 700 50	8.60	BB1	M16
80 x 20R x 12.7	R1506 700 51	10.53	BB1	M16
80 x 40R x 12.7				

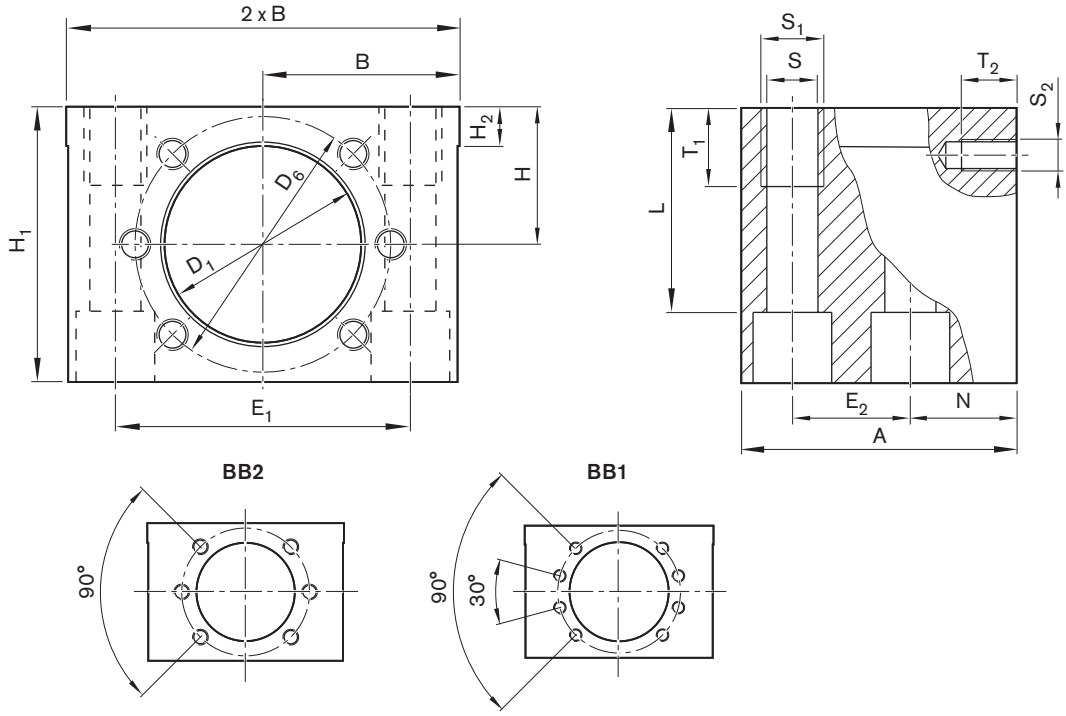

Size	(mm)															
	D_1	D_6	A	B	H	H_1	H_2	E_1	E_2	N	S	S_1	T_1	S_2	T_2	Clamping length
d_0 x P x D_w	H7			±0.01	±0.01											L
16 x 5R/L x 3	28	38	50	35	24	48	10	$50^{\pm0.1}$	$20^{\pm0.1}$	20	8.4	M10	15	M5	10	37.0
16 x 10R x 3																
16 x 16R x 3																
20 x 5R/L x 3	36	47	55	37.5	28	56	10	$55^{\pm0.1}$	$23^{\pm0.1}$	22	8.4	M10	15	M6	11	45.0
20 x 10R x 3																
20 x 20R x 3.5																
25 x 5R x 3	40	51	55	40	30	60	10	$60^{\pm0.1}$	$23^{\pm0.1}$	22	8.4	M10	15	M6	11	49.0
25 x 10R x 3																
25 x 25R x 3.5																
32 x 5R/L x 3.5	50	65	70	50	35	70	10	$75^{\pm0.1}$	$30^{\pm0.1}$	27	13.0	M16	20	M8	14	52.0
32 x 10R x 3.969																
32 x 20R x 3.969																
32 x 32R x 3.969																
40 x 5R/L x 3.5	63	78	80	60	42	84	12	$90^{\pm0.1}$	$35^{\pm0.1}$	31	15.0	M18	25	M8	17	65.5
40 x 10R/L x 6																
40 x 12R x 6																
40 x 16R x 6																
40 x 20R x 6																
40 x 25R x 6																
40 x 30R x 6																
40 x 40R x 6																
50 x 5R x 3.5	75	93	95	70	48	96	12	$110^{\pm0.15}$	$45^{\pm0.15}$	34	17.0	M20	30	M10	17	75.0
50 x 10R x 6																
50 x 12R x 6																
50 x 16R x 6																
50 x 20R x 6.5																
50 x 25R x 6.5																
50 x 30R x 6.5																
50 x 40R x 6.5																
63 x 10R x 6	90	108	100	75	55	110	15	$120^{\pm0.2}$	$46^{\pm0.15}$	37	17.0	M20	30	M10	20	89.0
63 x 20R x 6.5	95	115	100	80	58	116	15	$130^{\pm0.2}$	$46^{\pm0.15}$	37	17.0	M20	30	M12	20	95.0
63 x 40R x 6.5																
80 x 10R x 6.5	105	125	100	85	63	126	15	$140^{\pm0.2}$	$46^{\pm0.15}$	37	17.0	M20	30	M12	20	105.0
80 x 20R x 12.7	125	145	100	95	73	146	15	$160^{\pm0.2}$	$46^{\pm0.15}$	37	17.0	M20	30	M12	22	125.0
80 x 40R x 12.7																

Nut housing MGA

Aluminum nut housings MGA are designed for ZEM-E-S, ZEM-E-K and ZEM-E-A nuts

We recommend using screws with a strength class of 8.8.

Tightening torque
see “Installation in the machine” on page 147

Reference edges are formed on both sides.

Scope of delivery: Includes set screws, spacer ring, ring nut, washer key

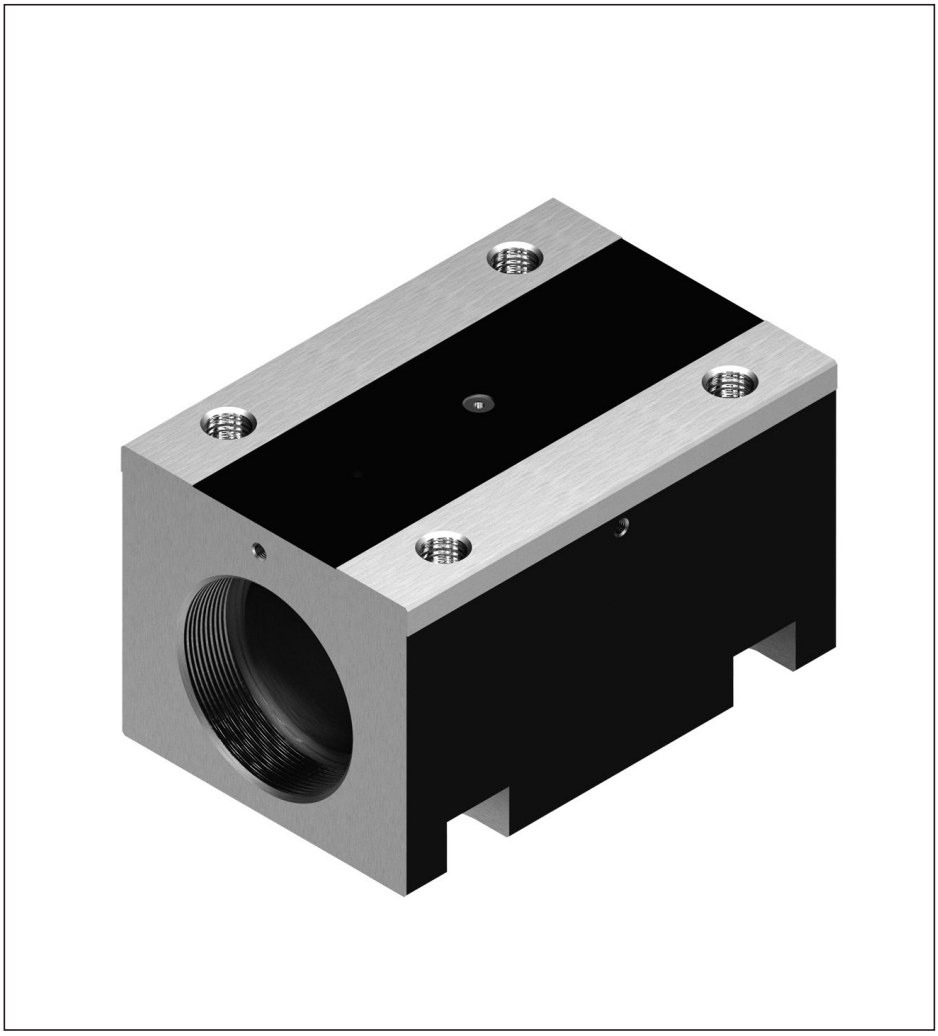

Size d_0 x P x D_W	Part number	Mass (kg)	Hex socket cap screw for screwing from below ISO 4762	
20 x 5R x 3	R1506 100 70	1.10	M8	
20 x 10R x 3				
20 x 20R x 3.5				
32 x 5R x 3.5	R1506 300 70	2.31	M10	
32 x 10R x 3.969				
32 x 20R x 3.969				
32 x 32R x 3.969				
40 x 5R x 3.5	R1506 400 70	4.32	M14	
40 x 10R x 6				
40 x 20R x 6				
40 x 40R x 6				

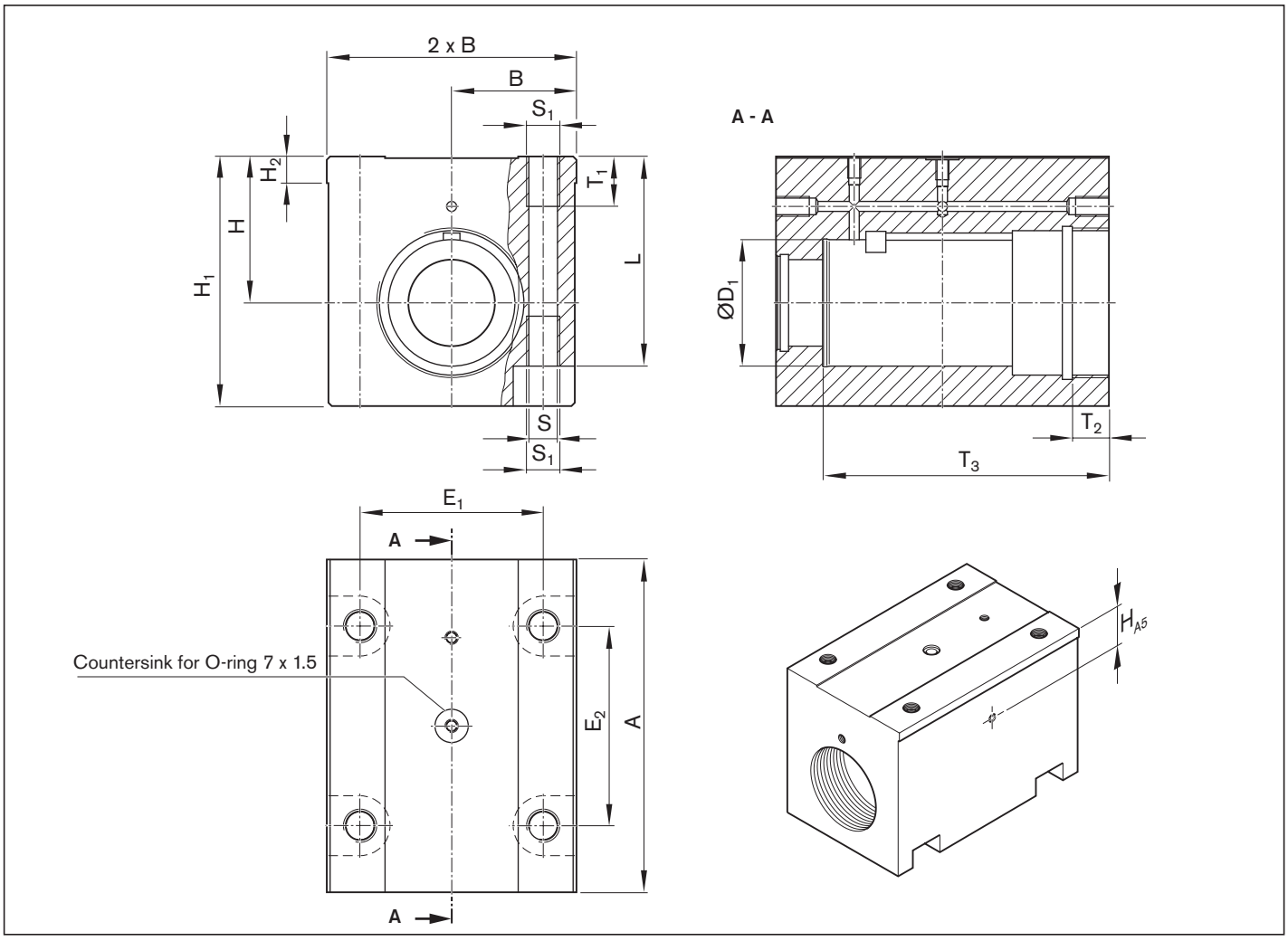

(mm)

A	B ±0.01	ØD1 H6	E1	E2	H ±0.01	H1	H2	HA5	S	S1	T1	T2	T3	Clamping length L
100	37.5	38	55	60	44	75	8	15	8.6	M10	15	11	86	63
150	50.0	50	75	100	49	80	9	16	10.5	M12	18	15	131	66
180	60.0	63	90	120	59	105	10	18	14.5	M16	24	20	155	86

Pillow block unit SEC-F assembly, aluminum

Fixed bearing with angular-contact thrust ball bearing LGF-B-…

The pillow block unit consists of:
- Precision pillow block housing made of aluminum with reference edges on both sides
- Angular-contact thrust ball bearing LGF...
- Slotted nut NMZ

The slotted nut is delivered unmounted.

Separate technical dimensioning to determine the limit values is absolutely necessary for all attachments (e.g. pillow block units, bearing assembly, etc.)

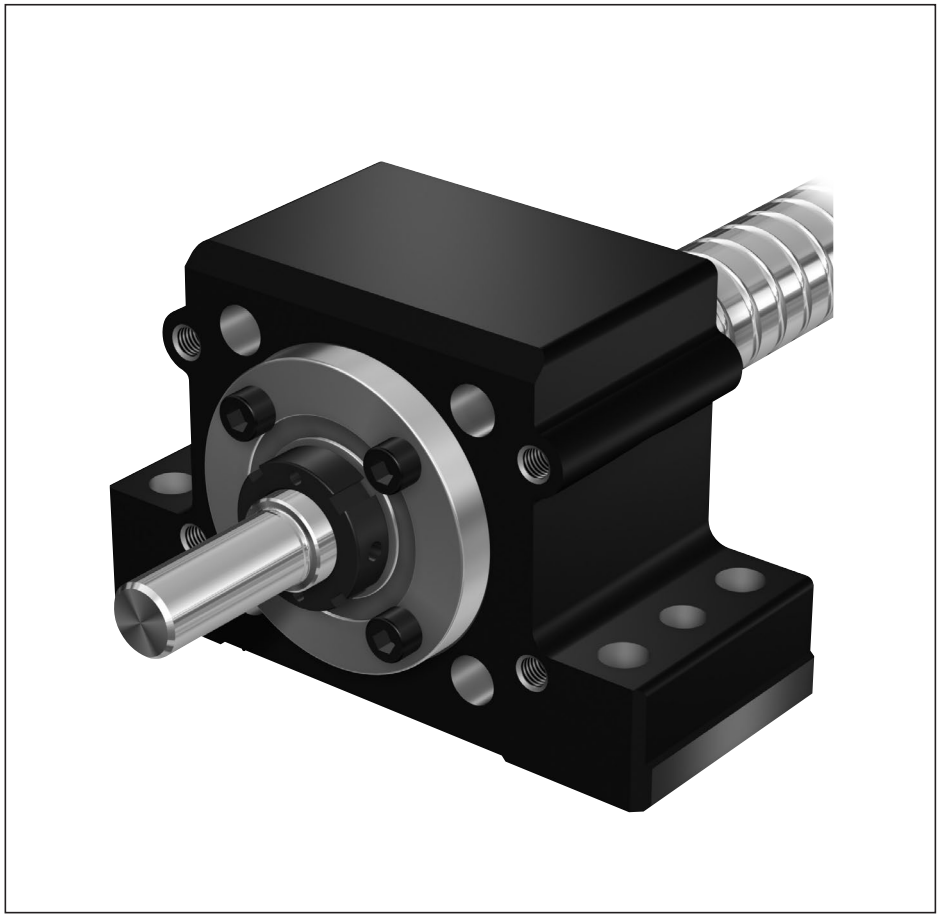

Size	Complete pillow block	Angular-contact thrust ball bearing						Slotted nut		Weight complete
		Load ratings (axial)		(mm)			Abbreviation		Abbreviation	
		dyn. C	stat. C_0					M_A		
d_0 x P	Part number	(N)	(N)	d	D	B		(Nm)		(kg)
20x5/10/20/40	R1594 012 00	17,000	24,700	12	55	25	LGF-B-1255	8.0	NMZ 12x1	1.49
32x5/10/20/32/64	R1594 020 00	26,000	47,000	20	68	28	LGF-B-2068	18.0	NMZ 20x1	1.88
40x5/10/12/16/20/25/30/40	R1594 030 00	29,000	64,000	30	80	28	LGF-B-3080	32.0	NMZ 30x1.5	2.75

Screw end Form 81, 81A, 82, 82A designed for motor mounting.

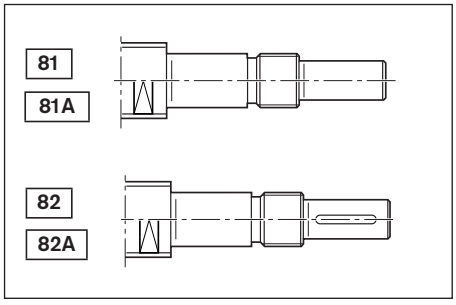

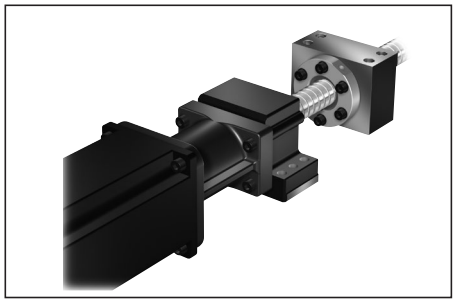

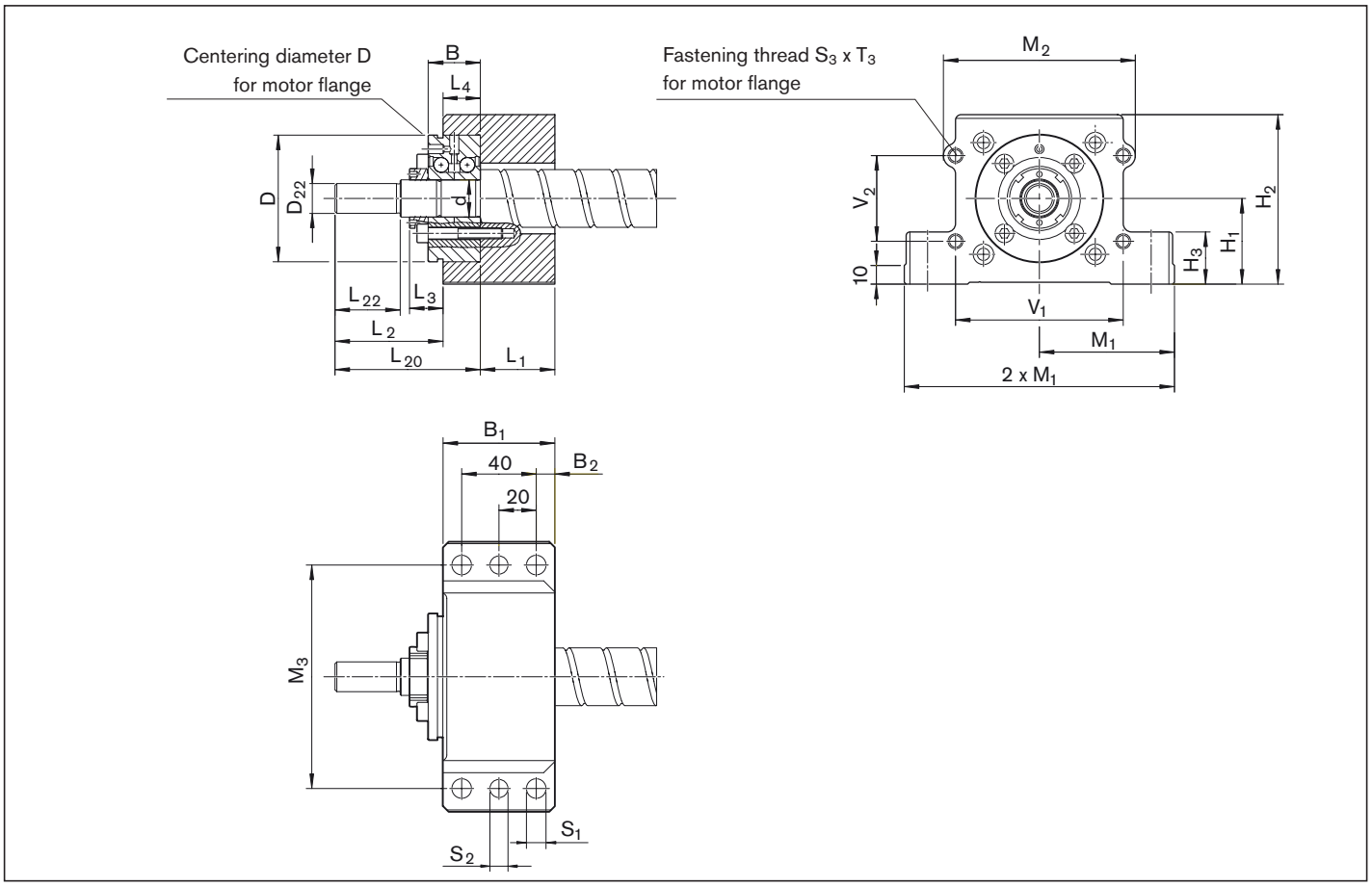

Size	(mm)																				
d_0 x P	B_1	B_2	L_1	L_2	L_3	L_4	L_{20}	L_{22}	D_{22}	M_1 ±0.015	M_2	M_3	H_1 ±0.015	H_2	H_3	S_1	S_2	S_3	T_3	V_1	V_2
20x5/10/20/40	60	10.0	42	42	15	18	60	25	10	72.5	80	120	41	81	28	10.5	9.7	M8	15	66	50
32x5/10/20/32/64	60	10.0	40	58	18	20	78	35	16	72.5	103	120	46	91	28	10.5	9.7	M8	15	90	46
40x5/10/12/16/20/25/30/40	65	12.5	45	73	20	20	93	50	25	90.0	116	150	56	111	33	13.0	11.7	M10	20	100	65

Pillow block unit SEC-L assembly, aluminum

Floating bearing with DIN 625 deep-groove ball bearing

The pillow block unit consists of:
- Precision pillow block housing made of aluminum with reference edges on both sides
- Deep-groove ball bearing as per DIN 625
- Retaining ring DIN 471
- Cover

All parts are delivered unmounted.

Separate technical dimensioning to determine the limit values is absolutely necessary for all attachments (e.g. pillow block units, bearing assembly, etc.)

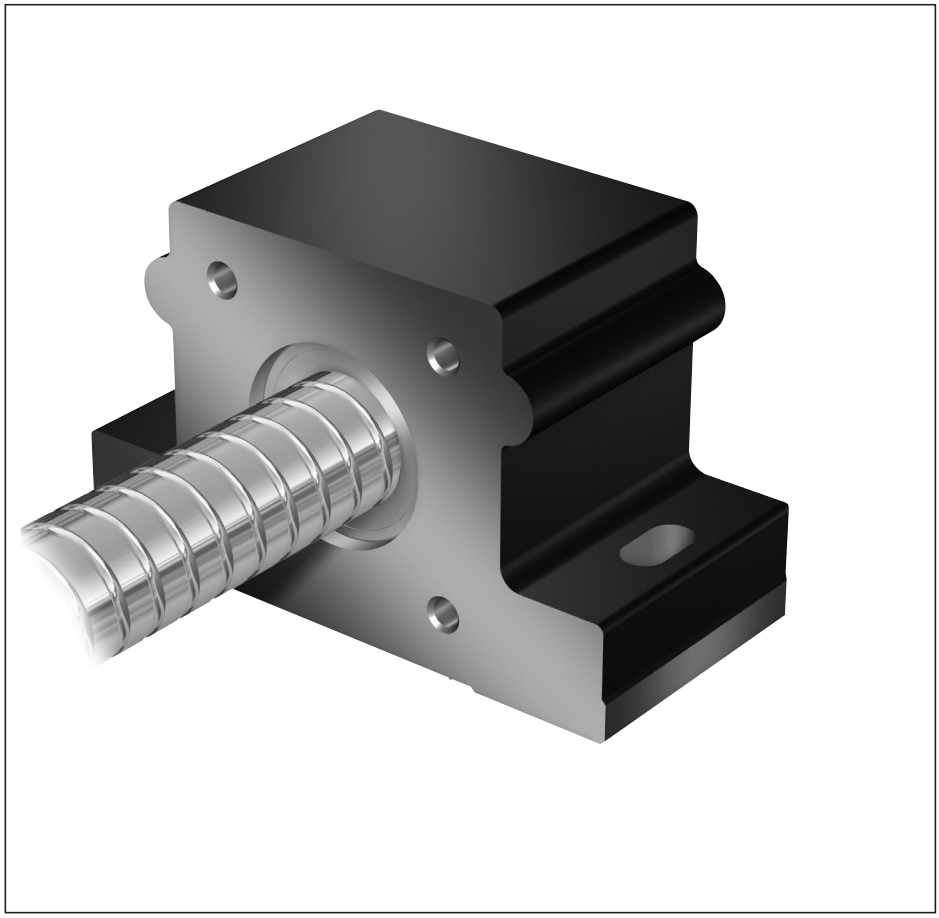

Size	Complete pillow block	Deep-groove ball bearing as per DIN 625						Retaining ring as per DIN 471	Weight complete
		Load ratings (radial)		(mm)			Designation DIN 625...		
		dyn. C	stat. C_0						
d_0 x P	Part number	(N)	(N)	d	D	B			(kg)
20x5/10/20/40	R1594 615 00	7,800	3,250	15	35	11	6202.2RS	15x1	1.24
32x5/10/20/32/64	R1594 620 00	12,700	5,700	20	47	14	6204.2RS	20x1.2	1.66
40x5/10/12/16/20/25/30/40	R1594 630 00	19,300	9,800	30	62	16	6206.2RS	30x1.5	2.74

Suitable for screw ends: Form

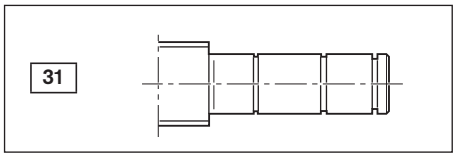

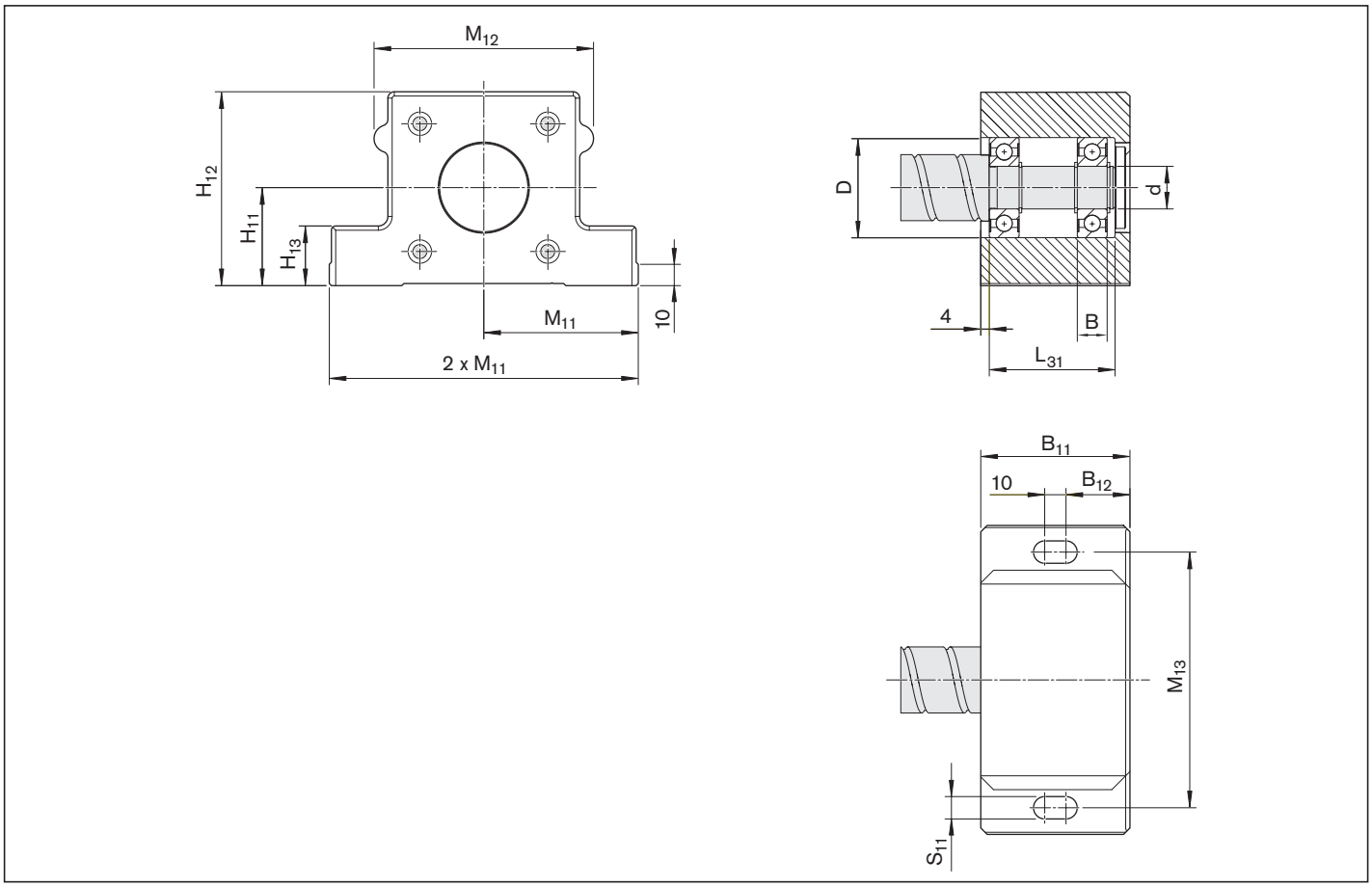

Size	(mm)									
d_0 x P	B_{11}	B_{12}	L_{31}	M_{11} ±0.015	M_{12}	M_{13}	H_{11} ±0.015	H_{12}	H_{13}	S_{11}
20x5/10/20/40	60	25	47	72.5	80	120	41	81	28	10.5
32x5/10/20/32/64	70	30	60	72.5	103	120	46	91	28	10.5
40x5/10/12/16/20/25/30/40	80	35	68	90.0	116	150	56	111	33	13.0

Pillow block unit SES-F assembly, steel

Fixed bearing with angular-contact thrust ball bearing LGF-B-…, LGF-C-…

The pillow block unit consists of:
- Precision pillow block housing made of steel with reference edges on both sides
- Angular-contact thrust ball bearing LGF...
- Slotted nut NMZ

The slotted nut is delivered unmounted.

Separate technical dimensioning to determine the limit values is absolutely necessary for all attachments (e.g. pillow block units, bearing assembly, etc.)

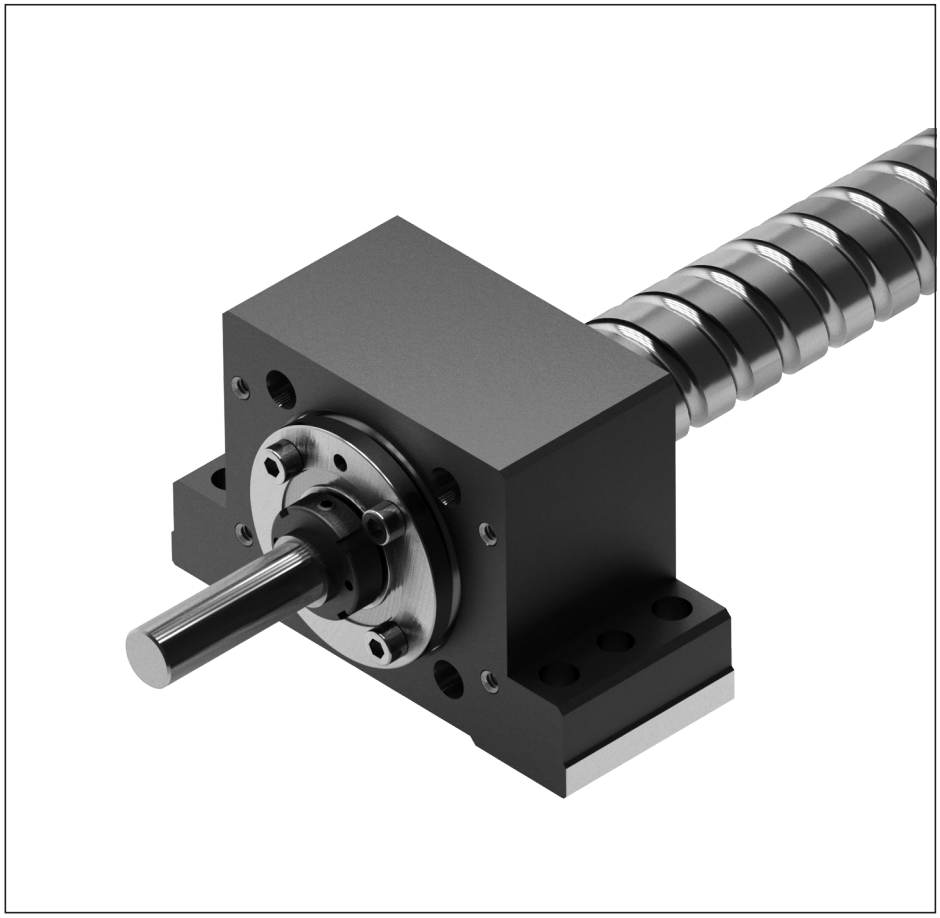

Size	Complete pillow block	Angular-contact thrust ball bearing						Slotted nut		Weight complete
		Load ratings (axial)		(mm)			Abbreviation		Abbreviation	
d_0 x P	Part number	dyn. C (N)	stat. C_0 (N)	d	D	B		M_A (Nm)		(kg)
20x5/10/20/40	R1595 012 20	17,000	24,700	12	55	25	LGF-B-1255	8	NMZ 12x1	3.37
25x5/10/25	R1595 017 20	18,800	31,000	17	62	25	LGF-B-1762	15	NMZ 17x1	3.38
32x5/10/20/32/64	R1595 020 20	26,000	47,000	20	68	28	LGF-B-2068	18	NMZ 20x1	4.31
40x5	R1595 030 20	29,000	64,000	30	80	28	LGF-B-3080	32	NMZ 30x1.5	6.31
40x10/12/16/20/25/30/40	R1595 330 20	47,500	127,000	30	80	56	LGF-C-3080	32	NMZ 30x1.5	7.53

Screw end Form 81, 81A, 82, 82A designed for motor mounting.

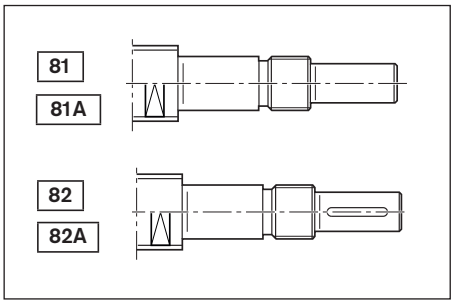

Further information on the bearing pair can be found on page 114.

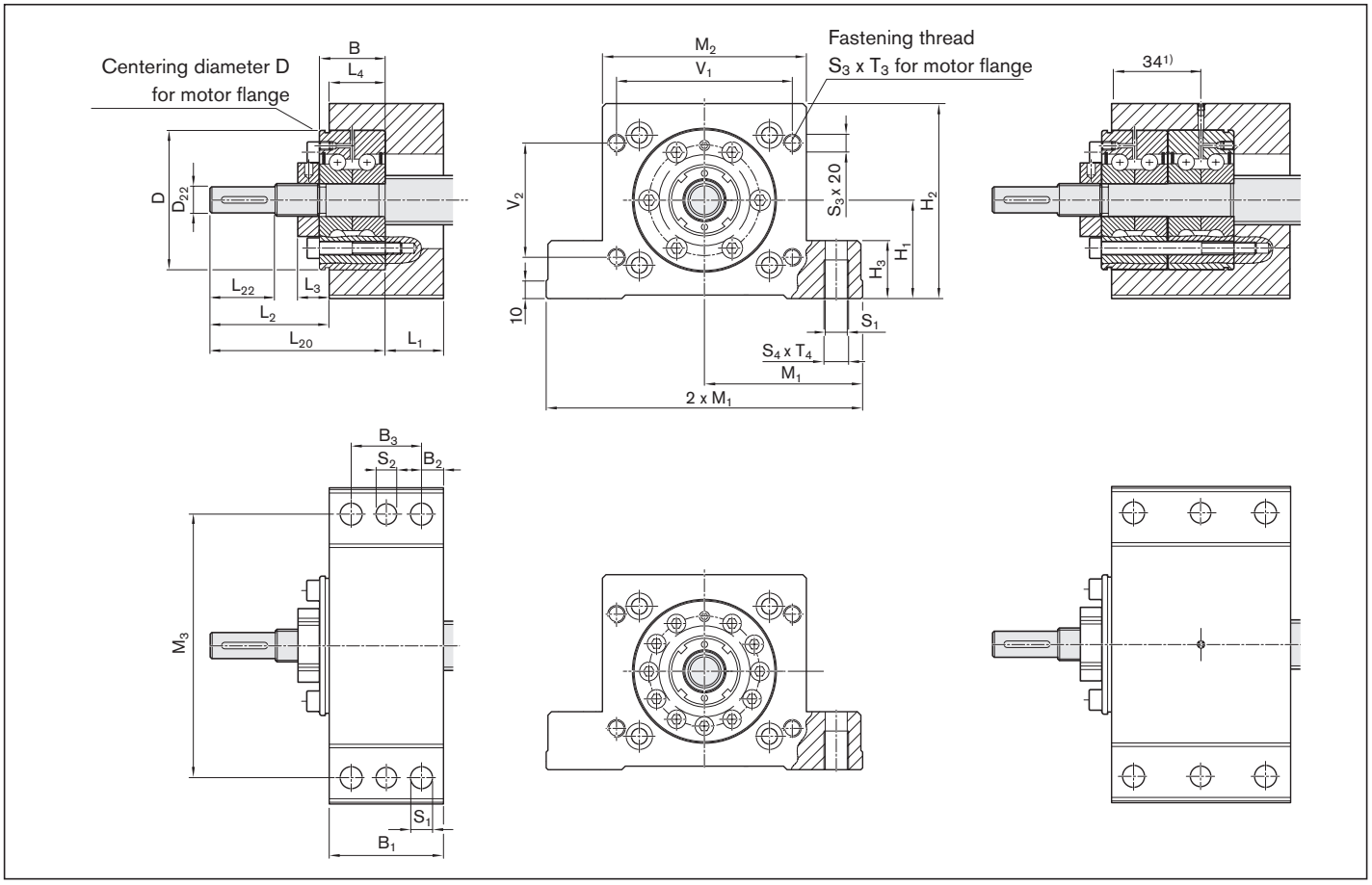

Size d_0xP	(mm)																							
	B_1	B_2	B_3	L_1	L_2	L_3	L_4	L_{20}	L_{22}	D_{22}	M_1 ±0.015	M_2	M_3	H_1 ±0.015	H_2	H_3	S_1	S_2	S_3	S_4	T_3	T_4	V_1	V_2
20x5/10/20/40	60	10.0	40	42	42	15	18	60	25	10	72.5	80	120	41	81	28	10.5	9.7	M8	M12	20	20	66	50
25x5/10/25	60	10.0	40	42	57	17	18	75	30	15	72.5	80	120	41	81	28	10.5	9.7	M8	M12	20	20	66	50
32x5/10/20/32/64	60	10.0	40	40	58	18	20	78	35	16	72.5	103	120	46	91	28	10.5	9.7	M8	M12	20	20	90	46
40x5	65	12.5	40	45	73	20	20	93	50	25	90.0	116	150	56	111	33	12.5	11.7	M10	M14	20	22	100	65
40x10/12/16/20/25/30/40	85	12.5	60	37	82	20	48	130	50	25	90.0	116	150	56	111	33	12.5	11.7	M10	M14	20	22	100	65

1) With part number R1595 330 20 only

Pillow block unit SES-L assembly, steel

Floating bearing with DIN 625 deep-groove ball bearing

The pillow block unit consists of:
- Precision pillow block housing made of steel with reference edges on both sides
- Deep-groove ball bearing as per DIN 625
- Retaining ring DIN 471
- Cover

All parts are delivered unmounted.

Separate technical dimensioning to determine the limit values is absolutely necessary for all attachments (e.g. pillow block units, bearing assembly, etc.)

Size	Complete pillow block	Deep-groove ball bearing as per DIN 625						Retaining ring as per DIN 471	Weight complete
		Load ratings (radial)		(mm)			Designation DIN 625...		
		dyn. C	stat. C_0						
d_0 x P	Part number	(N)	(N)	d	D	B			(kg)
20x5/10/20/40	R1595 615 00	7,800	3,250	15	35	11	6202.2RS	15x1	3.26
25x5/10/25	R1595 617 00	9,500	4,150	17	40	12	6203.2RS	17x1	3.39
32x5/10/20/32/64	R1595 620 00	12,700	5,700	20	47	14	6204.2RS	20x1.2	4.74
40x5/10/12/16/20/25/30/40	R1595 630 00	19,300	9,800	30	62	16	6206.2RS	30x1.5	7.30

Suitable for screw ends: Form

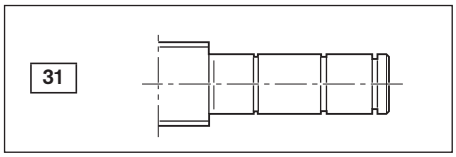

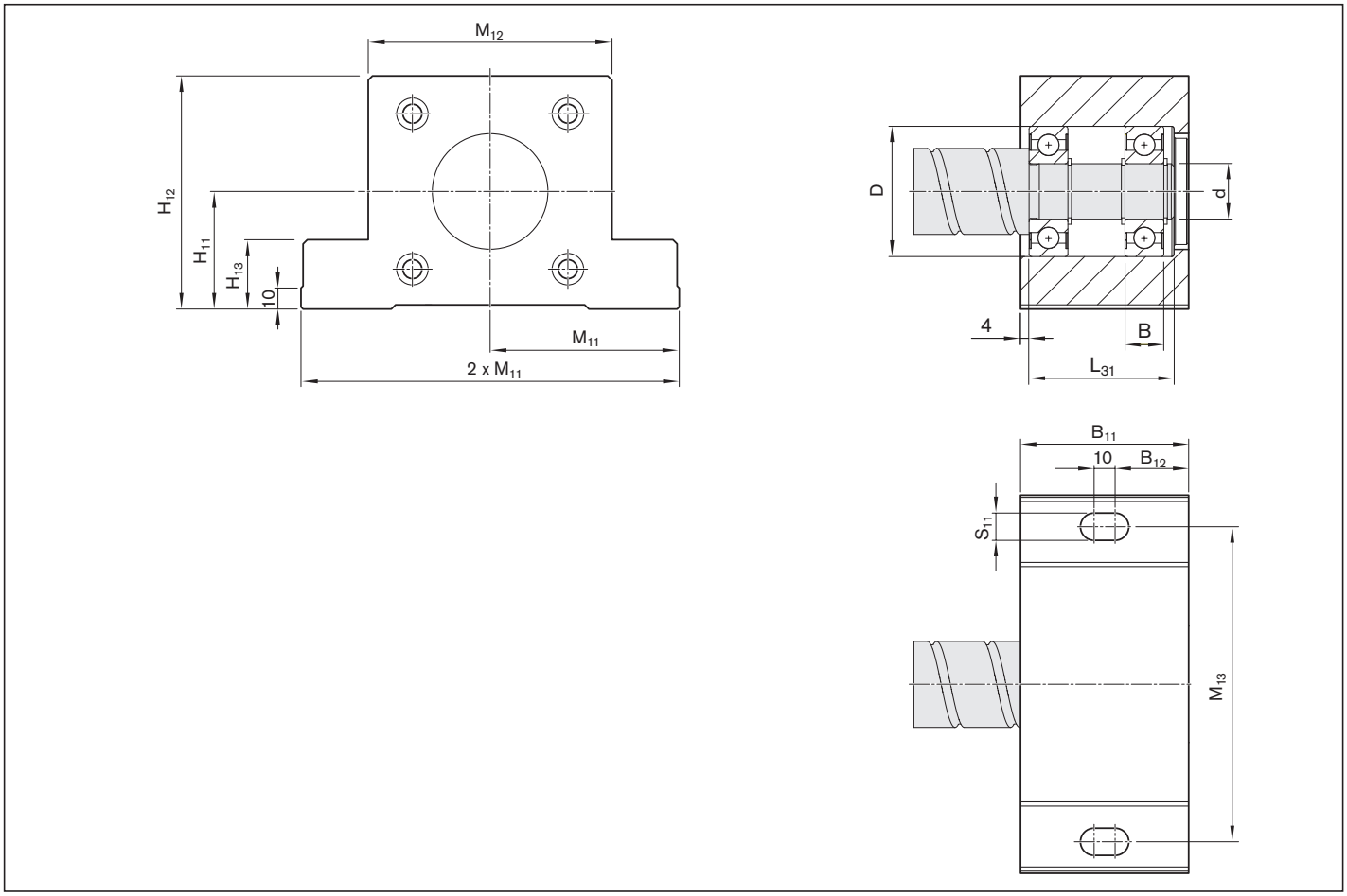

Size	(mm)									
d_0 x P	B_{11}	B_{12}	L_{31}	M_{11} ±0.015	M_{12}	M_{13}	H_{11} ±0.015	H_{12}	H_{13}	S_{11}
20x5/10/20/40	60	25.0	47	72.5	80	120	41	81	28	10.5
25x5/10/25	64	27.0	51	72.5	80	120	41	81	28	10.5
32x5/10/20/32/64	70	30.0	60	72.5	103	120	46	91	28	10.5
40x5/10/12/16/20/25/30/40	80	35.0	68	90.0	116	150	56	111	33	13.0

Pillow block unit SEB-F assembly

Fixed bearing with angular-contact thrust ball bearing LGN-B-… LGN-C-…

The pillow block unit consists of:
- Precision pillow block housing made of steel with reference edges on both sides
- Angular-contact thrust ball bearing LGN
- Slotted nut NMA or NMZ
- Ring nut GWR

The slotted nut is delivered unmounted.

Separate technical dimensioning to determine the limit values is absolutely necessary for all attachments (e.g. pillow block units, bearing assembly, etc.)

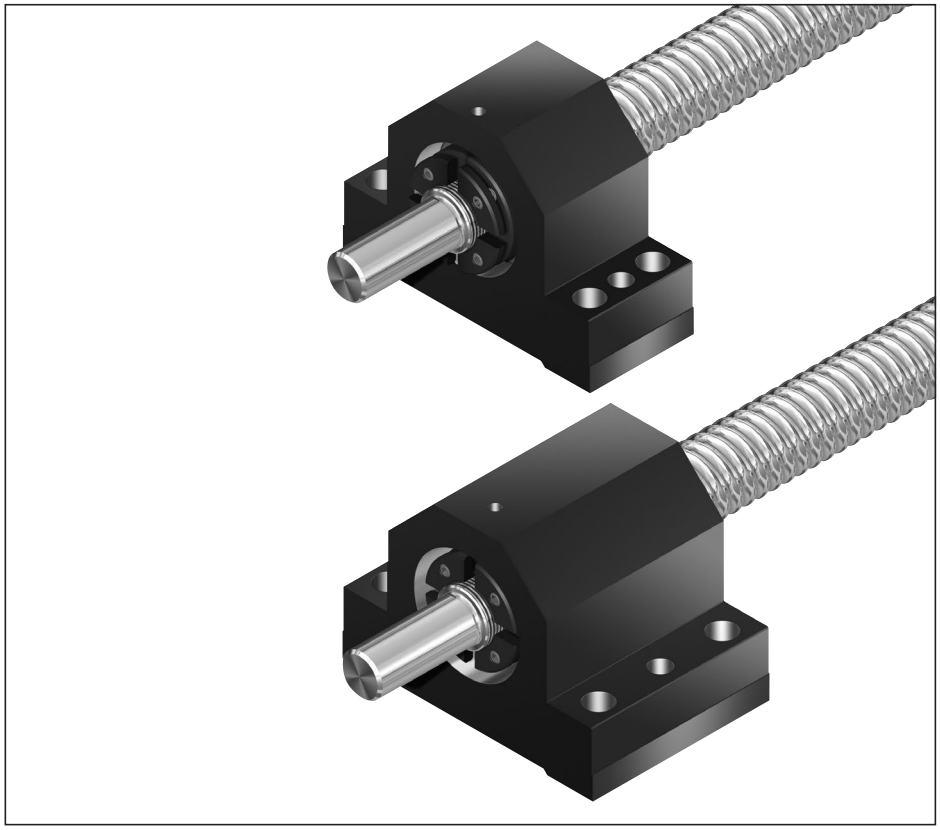

Size	Complete pillow block	Angular-contact thrust ball bearing						Slotted nut		Weight complete
		Load ratings (axial)		Dimensions (mm)			Abbreviation		Abbreviation	
		dyn. C	stat. C_0					M_A		
d_0 x P	Part number	(N)	(N)	d	D	B		(Nm)		(kg)
6 x 1/2	R1591 106 00	6,900	8,500	6	24	15	LGN-B-0624	2.0	NMZ 6x0.5	0.38
8 x 1/2/2.5/5	R1591 106 00	6,900	8,500	6	24	15	LGN-B-0624	2.0	NMZ 6x0.5	0.38
12 x 2/5/10	R1591 106 20	6,900	8,500	6	24	15	LGN-B-0624	2.0	NMZ 6x0.5	0.38
16 x 5/10/16	R1591 110 20	13,400	18,800	10	34	20	LGN-B-1034	6.0	NMZ 10x1	0.87
20 x 5/10/20/40	R1591 112 20	17,000	24,700	12	42	25	LGN-B-1242	8.0	NMZ 12x1	1.12
25 x 5/10/25	R1591 117 20	18,800	31,000	17	47	25	LGN-B-1747	15.0	NMZ 17x1	1.65
25 x 5/10/25	R1591 117 30	18,800	31,000	17	47	25	LGN-B-1747	15.0	NMA 17x1	1.69
32 x 5/10/20/32/64	R1591 120 20	26,000	47,000	20	52	28	LGN-B-2052	18.0	NMZ 20x1	1.93
32 x 5/10/20/32/64	R1591 120 30	26,000	47,000	20	52	28	LGN-B-2052	18.0	NMA 20x1	2.03
40 x 10/12/16/20/25/30/40	R1591 225 30	44,500	111,000	25	57	56	LGN-C-2557	25.0	NMA 25x1.5	5.13
40 x 5	R1591 130 20	29,000	64,000	30	62	28	LGN-B-3062	32.0	NMZ 30x1.5	2.64
40 x 5	R1591 130 30	29,000	64,000	30	62	28	LGN-B-3062	32.0	NMA 30x1.5	2.77
50 x 5	R1591 135 30	41,000	89,000	35	72	34	LGN-B-3572	40.0	NMA 35x1.5	4.66
50 x 10/12/16/20/25/30/40	R1591 230 30	47,500	127,000	30	62	56	LGN-C-3062	32.0	NMA 30x1.5	7.04
63 x 10/20/40	R1591 140 30	72,000	149,000	40	90	46	LGN-A-4090	55.0	NMA 40x1.5	10.49
80 x 10/20/40	R1591 150 30	113,000	250,000	50	110	54	LGN-A-50110	85.0	NMA 50x1.5	15.61

Suitable for screw ends: Form

For screws 6 x 1/2 and 8 x 1/2/2.5/5: Form 831, 931

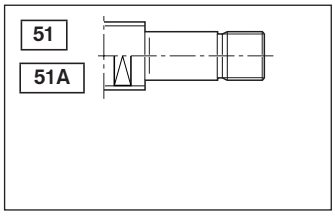

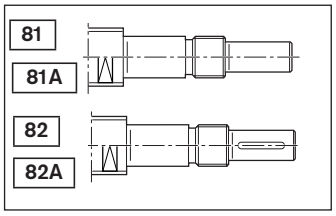

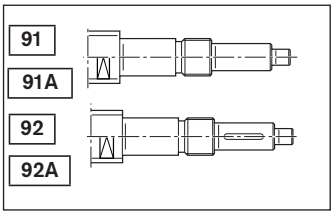

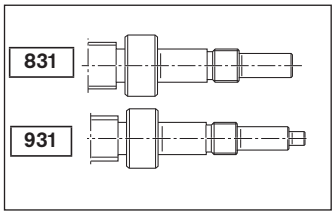

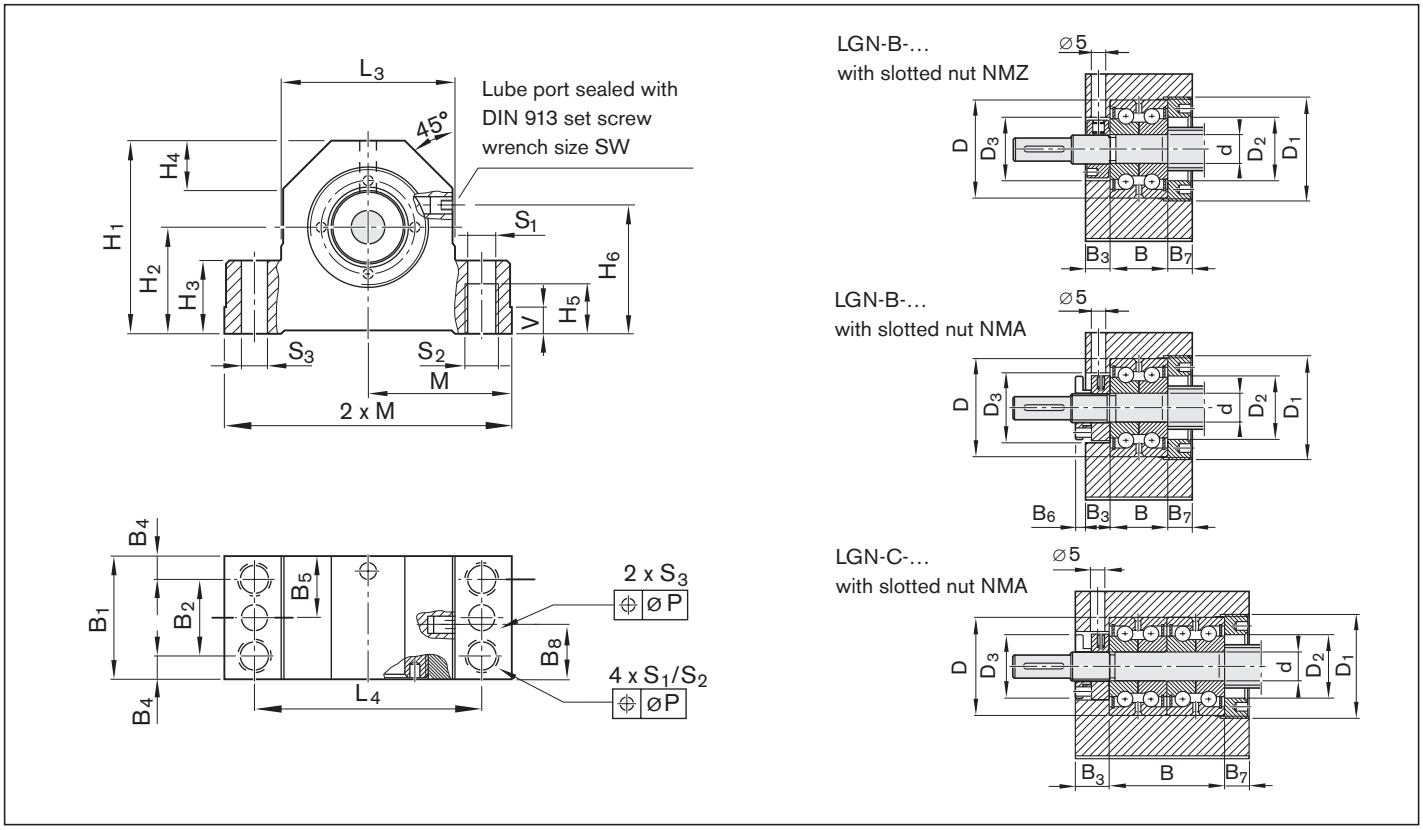

Size	(mm)																									
d_0 x P	M js7	L_3	L_4	H_1	H_2 ±0.02	H_3	H_4	H_5	H_6	B_1	B_2	B_3	B_4	B_5	B_6	B_7	B_8	V	S_1 H12	S_2	S_3	SW	D_1	D_2	D_3	P
6 x 1/2	31.0	38	50	34	18	13	8	9	22	32	16	8.5	8.0	16.0	–	8.5	16.0	6	5.3	M6	3.7	3	M26x1.5	16.5	18	0.10
8 x 1/2/2.5/5	31.0	38	50	34	18	13	8	9	22	32	16	8.5	8.0	16.0	–	8.5	16.0	6	5.3	M6	3.7	3	M26x1.5	16.5	18	0.10
12 x 2/5/10	31.0	38	50	41	22	13	8	9	22	32	16	8.5	8.0	16.0	–	8.5	16.0	6	5.3	M6	3.7	3	M26x1.5	16.5	18	0.10
16 x 5/10/16	43.0	52	68	58	32	22	14	15	37	37	23	8.5	7.0	18.5	–	8.5	18.5	8	8.4	M10	7.7	4	M36x1.5	22.0	27	0.15
20 x 5/10/20/40	47.0	60	77	64	34	22	16	15	40	42	25	8.5	8.5	21.0	–	8.5	21.0	8	8.4	M10	7.7	4	M45x1.5	28.0	32	0.15
25 x 5/10/25	54.0	66	88	72	39	27	18	18	45	46	29	10.5	8.5	23.0	–	10.5	23.0	10	10.5	M12	9.7	4	M50x1.5	31.0	36	0.20
25 x 5/10/25	54.0	66	88	72	39	27	18	18	45	46	29	10.5	8.5	23.0	7.5	10.5	23.0	10	10.5	M12	9.7	4	M50x1.5	31.0	36	0.20
32 x 5/10/20/32/64	56.0	70	92	77	42	27	19	18	48	49	29	10.5	10.0	24.5	–	10.5	24.5	10	10.5	M12	9.7	4	M55x1.5	36.0	42	0.20
32 x 5/10/20/32/64	56.0	70	92	77	42	27	19	18	48	49	29	10.5	10.0	24.5	7.5	10.5	24.5	10	10.5	M12	9.7	4	M55x1.5	36.0	42	0.20
40 x 10/12/16/20/25/30/40	63.0	80	105	98	58	32	23	21	64	89	62	20.5	13.5	44.5	–	12.5	54.5	12	12.6	M14	9.7	4	M62x1.5	43.0	48	0.20
40 x 5	63.0	80	105	90	50	32	22	21	56	53	32	12.5	10.5	26.5	–	12.5	26.5	12	12.6	M14	9.7	4	M65x1.5	47.0	53	0.20
40 x 5	63.0	80	105	90	50	32	22	21	56	53	32	12.5	10.5	26.5	7.5	12.5	26.5	12	12.6	M14	9.7	4	M65x1.5	47.0	53	0.20
50 x 5	72.0	92	118	105	58	38	25	22	63	70	43	20.5	13.5	35.0	–	15.5	32.5	12	12.5	M14	9.7	4	M78x2	54.0	60	0.20
50 x 10/12/16/20/25/30/40	72.0	92	118	112	65	38	25	22	70	92	65	20.5	13.5	46.0	–	15.5	57.5	12	12.5	M14	9.7	4	M78x2	54.0	53	0.20
63 x 10/20/40	95.0	130	160	138	73	50	35	22	78	85	58	22.5	13.5	42.5	–	16.5	39.5	16	12.5	M14	9.7	4	M95x2	68.0	72	0.20
80 x 10/20/40	102.5	145	175	165	93	50	40	36	98	98	58	25.5	20.0	49.0	–	18.5	45.5	16	17.3	M20	11.7	4	M115x2	85.0	90	0.20

Pillow block unit SEB-L assembly

Floating bearing with DIN 625 deep-groove ball bearing

The pillow block unit consists of:
- Precision pillow block housing made of steel with reference edge on one side
- Deep-groove ball bearing as per DIN 625
- Retaining ring DIN 471
- Cover

All parts are delivered unmounted.

Separate technical dimensioning to determine the limit values is absolutely necessary for all attachments (e.g. pillow block units, bearing assembly, etc.)

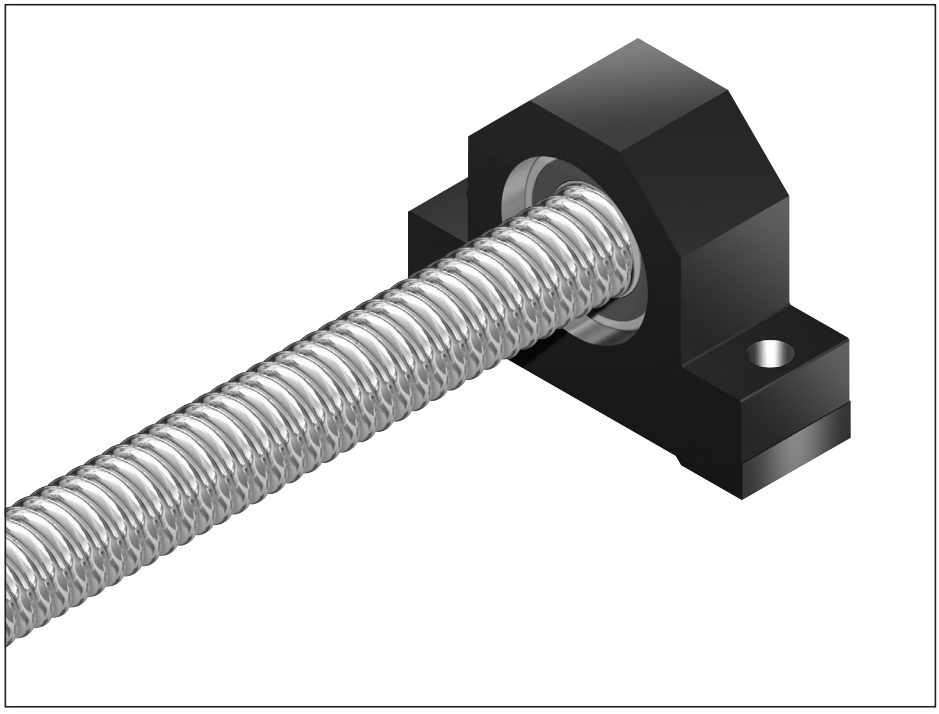

Size	Complete pillow block	Deep-groove ball bearing as per DIN 625						Retaining ring as per DIN 471	Weight complete
		Load ratings (radial)		(mm)			Designation DIN 625...		
		dyn. C	stat. C_0						
d_0 x P	Part number	(N)	(N)	d	D	B			(kg)
8 x 1/2/2.5/5	R1591 605 00	1,900	590	5	16	5	625.2RS	5x0.6	0.14
12 x 2/5/10	R1591 606 20	2,450	900	6	19	6	626.2RS	6x0.7	0.18
16 x 5/10/16	R1591 610 20	6,000	2,240	10	30	9	6200.2RS	10x1	0.54
20 x 5/10/20/40	R1591 612 20	6,950	2,650	12	32	10	6201.2RS	12x1	0.73
25 x 5/10/25	R1591 617 20	9,500	4,150	17	40	12	6203.2RS	17x1	0.96
32 x 5/10/20/32/64	R1591 620 20	12,700	5,700	20	47	14	6204.2RS	20x1.2	1.24
40 x 5	R1591 630 20	19,300	9,800	30	62	16	6206.2RS	30x1.5	1.66
40 x 10/12/16/20/25/30/40	R1591 630 10	19,300	9,800	30	62	16	6206.2RS	30x1.5	1.82
50 x 5 [1]	R1591 635 10	25,500	13,200	35	72	17	6207.2RS	35x1.5	2.66
50 x 10/12/16/20/25/30/40 [1]	R1591 635 20	25,500	13,200	35	72	17	6207.2RS	35x1.5	2.87
63 x 10/20/40 [1]	R1591 650 20	36,500	20,800	50	90	20	6210.2RS	50x2	5.39
80 x 10/20/40 [1]	R1591 660 20	52,000	31,000	60	110	22	6212.2RS	60x2	7.09

1) without cover

Suitable for screw ends: Form

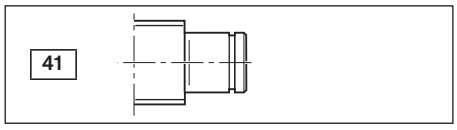

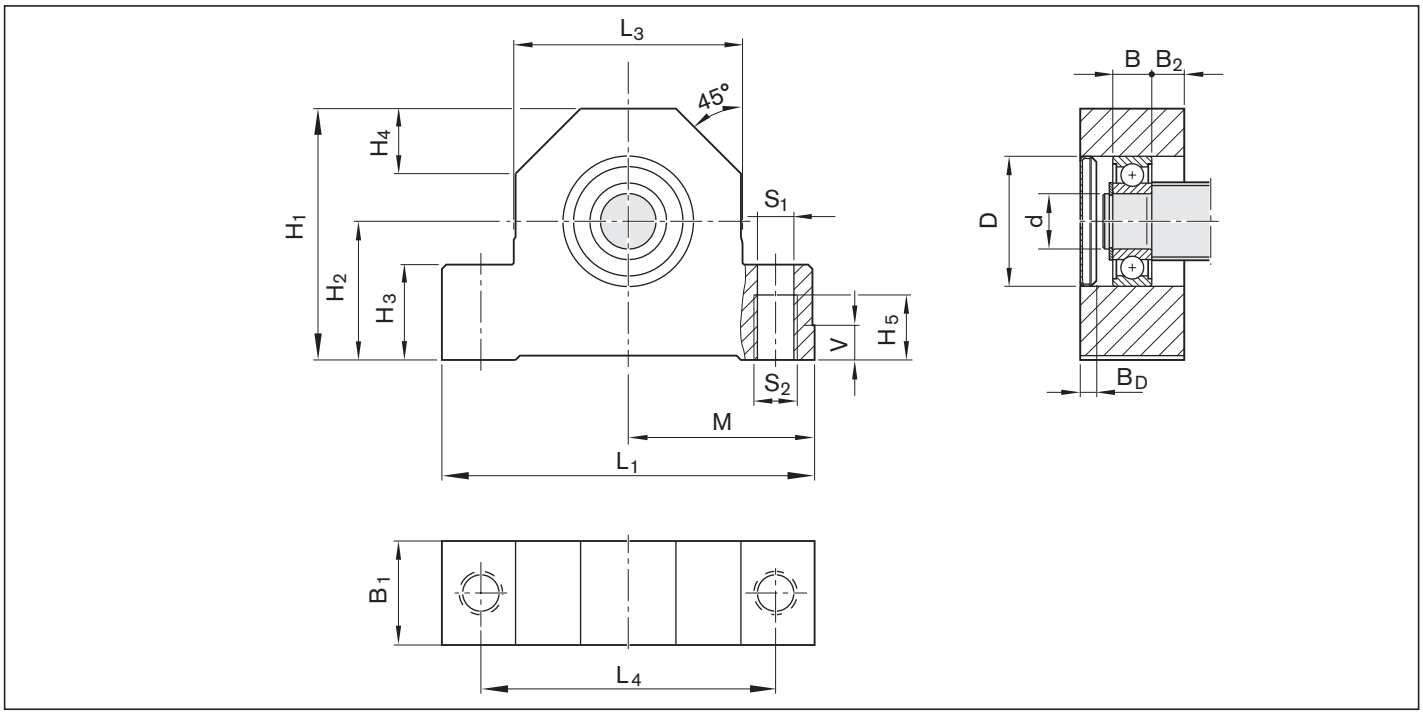

Size	(mm)														
	L_1	L_3	L_4	H_1	H_2	H_3	H_4	H_5	B_1	B_2	M	V	S_1	S_2	Cover
d_0 x P					±0.02						js7		H12		B_D
8 x 1/2/2.5/5	62	38	50	34	18	13	11	9	13	4.0	31.0	6	5.3	M6	2.6
12 x 2/5/10	62	38	50	41	22	13	11	9	15	4.5	31.0	6	5.3	M6	2.6
16 x 5/10/16	86	52	68	58	32	22	15	15	24	7.5	43.0	8	8.4	M10	3.8
20 x 5/10/20/40	94	60	77	64	34	22	17	15	26	8.0	47.0	8	8.4	M10	3.8
25 x 5/10/25	108	66	88	72	39	27	19	18	28	8.0	54.0	10	10.5	M12	3.7
32 x 5/10/20/32/64	112	70	92	77	42	27	20	18	34	10.0	56.0	10	10.5	M12	4.8
40 x 5	126	80	105	90	50	32	23	21	38	11.0	63.0	12	12.6	M14	4.5
40 x 10/12/16/20/25/30/40	126	80	105	98	58	32	23	21	38	11.0	63.0	12	12.6	M14	4.5
50 x 5	144	92	118	105	58	38	25	22	41	12.0	72.0	12	12.5	M14	–
50 x 10/12/16/20/25/30/40	144	92	118	112	65	38	25	22	41	12.0	72.0	12	12.5	M14	–
63 x 10/20/40	190	130	160	138	73	50	35	22	46	13.0	95.0	16	12.5	M14	–
80 x 10/20/40	205	145	175	165	93	50	40	36	50	14.0	102.5	16	17.3	M20	–

Flange bearing assembly SEE-F-Z

Fixed bearing with angular-contact thrust ball bearing

The bearing assembly consists of:
- precision flanged housing made of steel
- 2 pre-tensioned angular-contact thrust ball bearings
- Slotted nut
- Cover
- Radial shaft seal

Separate technical dimensioning to determine the limit values is absolutely necessary for all attachments (e.g. pillow block units, bearing assembly, etc.)

Size	Complete pillow block	Angular-contact thrust ball bearing						Slotted nut
		dyn. C	stat. C_0	max. axial load	(mm)			
d_0					d	D	B	M_A
	Part number	(N)	(N)	(N)				(Nm)
25	R159751700	25,900	40,500	32,000	17	47	30	15
32	R159752000	25,900	40,500	32,000	20	47	30	18
10	R159752500	29,900	58,500	46,400	25	62	30	25
40	R159753000	29,900	58,500	46,400	30	62	30	32

Form	Version[1)]	Size (mm)															
											Centering Hole		Hex Socket		Threat	
		d_0	P	L_{jf}	D_1 h6	L_1	D_2 h7	L_2	G_1	LG_1	Z	t_Z	S	t_S	G	t_g
81/81A	**176**	25	5/10/25	110.0	17	58.0	12	29.0	M17x1	23.0	M4	10.0	4	4	M5	8
	207	32	5/10/20/32/64	120.0	20	58.0	15	39.0	M20x1	23.0	M5	12.0	4	4	M6	9
	252	40	5/10/12/16/20/25/30/40	140.0	25	63.0	20	51.0	M25x1.5	26.0	M6	16.0	5	5	M8	12
	311	40	5/10/12/16/20/25/30/40	150.0	30	63.0	25	61.0	M30x1.5	26.0	M10	22.0	8	8	M10	15

1) The allocation of screw ends to the bearing assemblies is clearly defined by the version

Suitable for screw ends: Form

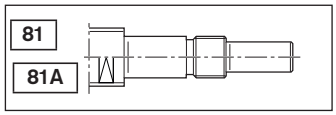

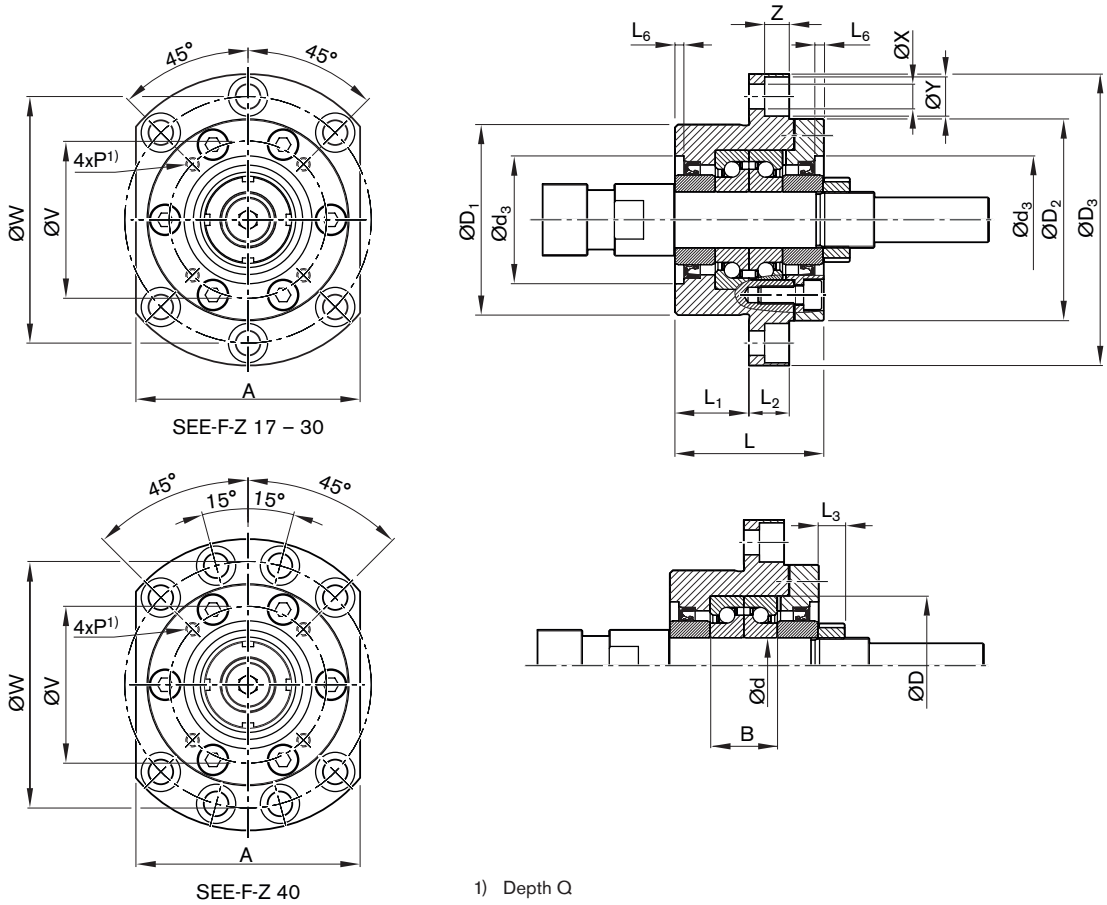

1) Depth Q

Size	(mm)																	Weight complete m
d_0	D_1 g6	D_2	D_3	L	L_1	L_2	L_3	A	d_3 H8	L_6	W	X	Y	Z	V	P	Q	(kg)
25	70	72	106	60	32	15	10	80	45	3	88	9	14.0	8.5	58	M5	10	1.84
32	70	72	106	60	32	15	10	80	45	3	88	9	14.0	8.5	58	M5	10	1.81
40	85	90	130	66	33	18	12	100	57	4	110	11	17.5	11.0	70	M6	12	3.13
40	85	90	130	66	33	18	12	100	57	4	110	11	17.5	11.0	70	M6	12	3.03

Version	Wrench size		
	SW	b_{SW}	l_{SW}
176	19	10	10.5
207	24	15	10.5
252	30	15	12.5
311	30	15	45.0

Bearing assembly LAF

Fixed bearing with angular-contact thrust ball bearing LGF

Double-thrust, screw-down,
series LGF-B-…
LGF-A-…
Double-thrust, screw-on,
Series LGF-C-…

The fixed bearing consists of:
- Angular-contact thrust ball bearing LGF
- Slotted nut NMA..., NMZ...

Separate technical dimensioning to determine the limit values is absolutely necessary for all attachments (e.g. pillow block units, bearing assembly, etc.)

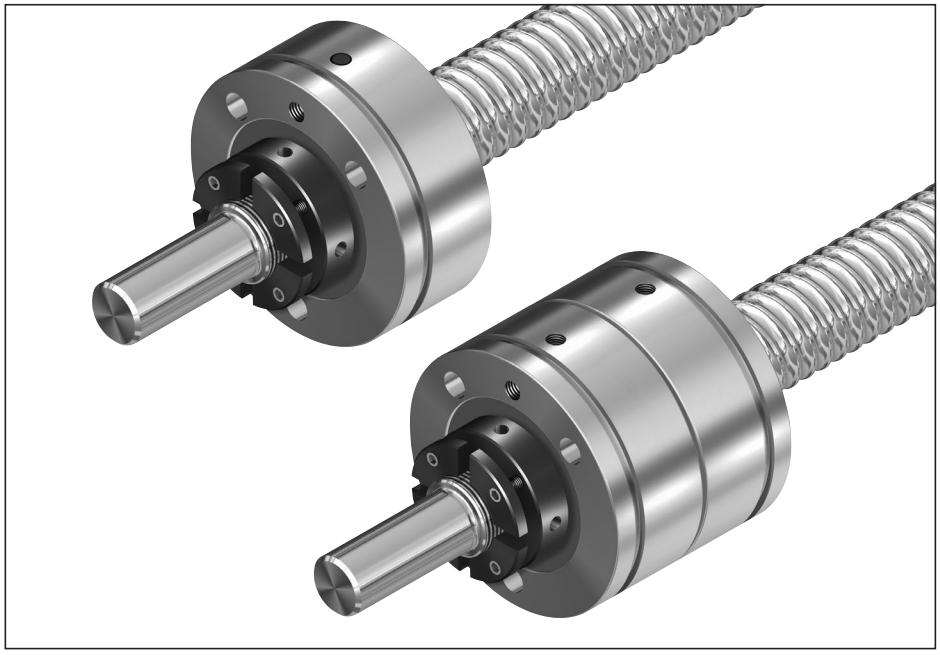

Size	Module	Single parts				Weight complete
		Angular-contact thrust ball bearing		Slotted nut		
d_0 x P	Part number	Abbreviation	Part number	Abbreviation	Part number	(kg)
20 x 5/10/20/40	R1590 012 00	LGF-B-1255	R3414 009 06	NMZ 12x1	R3446 003 04	0.385
25 x 5/10/25	R1590 017 00	LGF-B-1762	R3414 010 06	NMZ 17x1	R3446 004 04	0.485
	R1590 017 30			NMA 17x1	R3446 014 04	0.520
32 x 5/10/20/32/64	R1590 020 00	LGF-B-2068	R3414 001 06	NMZ 20x1	R3446 005 04	0.645
	R1590 020 30			NMA 20x1	R3446 015 04	0.740
40 x 5	R1590 030 00	LGF-B-3080	R3414 011 06	NMZ 30x1.5	R3446 006 04	0.855
	R1590 030 30			NMA 30x1.5	R3446 016 04	0.980
40 x 10/12/16/20/25/30/40	R1590 325 30	LGF-C-2575	R3414 015 06	NMA 25x1.5	R3446 011 04	1.600
50 x 5	R1590 035 30	LGF-B-3590	R3414 026 06	NMA 35x1.5	R3446 012 04	1.360
50 x 10/12/16/20/25/30/40	R1590 330 30	LGF-C-3080	R3414 027 06	NMA 30x1.5	R3446 016 04	1.760
63 x 10/20/40	R1590 040 30	LGF-B-40115	R3414 028 06	NMA 40x1.5	R3446 018 04	2.500
80 x 10/20/40	R1590 050 30	LGF-A-50140	R3414 029 06	NMA 50x1.5	R3446 019 04	5.130

Size	Load ratings[1)]		Bearing friction torque with sealing disk	Rigidity (axial)	Rigidity against tilting	Limit speed (grease)
	dyn. C	stat. C_0	M_{RL}	R_{fb}	R_{kl}	n_G
d_0 x P	(N)	(N)	(Nm)	(N/µm)	(Nm/mrad)	(rpm)
20x5/10/20/40	17,000	24,700	0.16	375	50	3,800
25x5/10/25	18,800	31,000	0.24	450	80	3,300
32x5/10/20/32/64	26,000	47,000	0.30	650	140	3,000
40x5	29,000	64,000	0.50	850	300	2,200
40 x 10/12/16/20/25/30/40	44,500	111,000	0.60	1 300	450	2,600
50x5	41,000	89,000	0.60	900	400	2,000
50 x 10/12/16/20/25/30/40	47,500	127,000	0.75	1 500	620	2,200
63x10/20/40	72,000	149,000	1.30	1 200	750	1,600
80x10/20/40	113,000	250,000	2.60	1 400	1 500	1,200

1) See page 187 for load on bearing

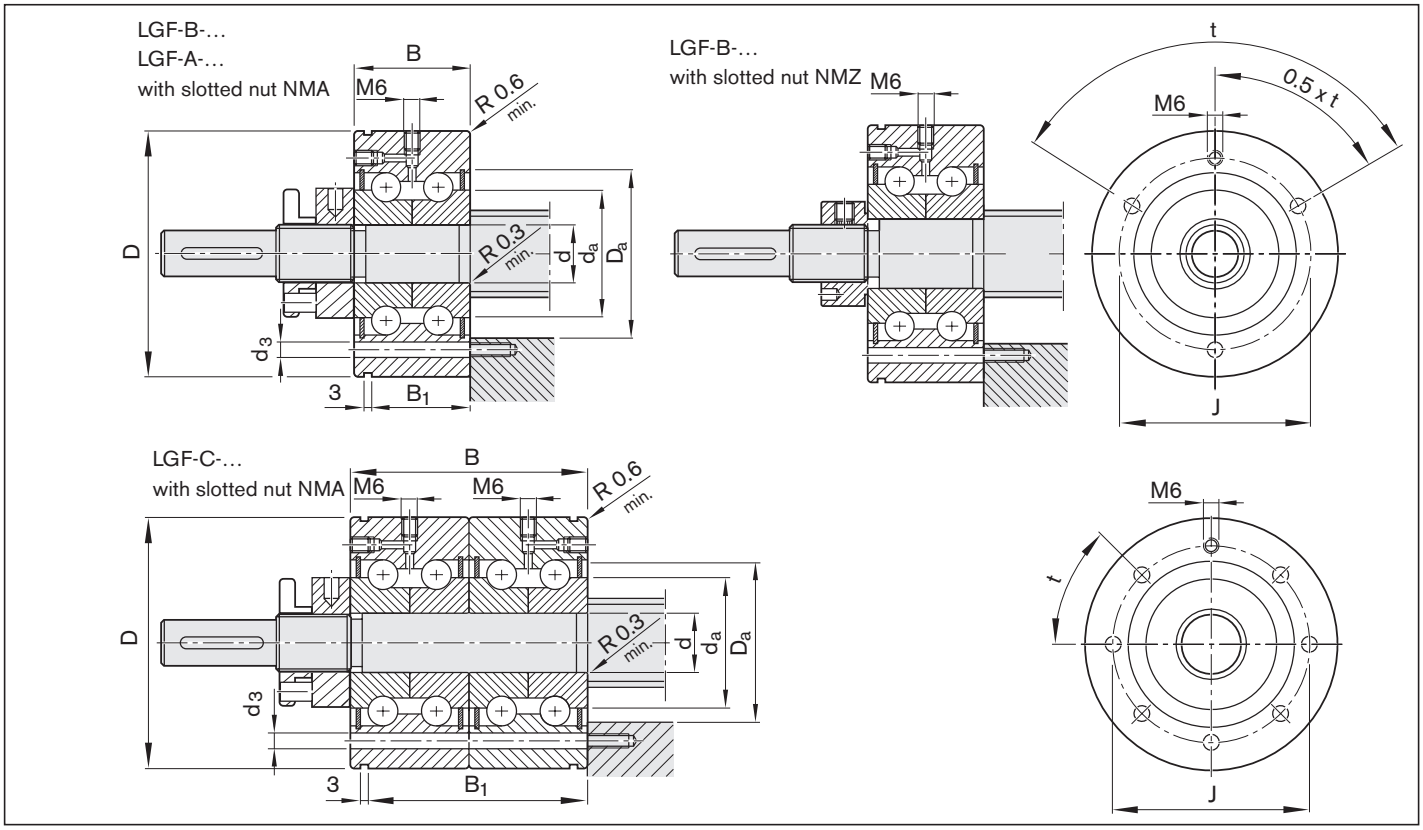

Size	Dimensions (mm)				Mounting dimensions (mm)					Mounting holes		
	d	D	B	B_1	J	D_a		d_a		Minimum	d_3	t
d_0 x P						min	max	min	max	number[1)]	(mm)	(°)
20x5/10/20/40	$12_{-0.010}$	$55_{-0.013}$	$25_{-0.25}$	17	42	30	33	16	29	3	6.8	120
25x5/10/25	$17_{-0.010}$	$62_{-0.013}$	$25_{-0.25}$	17	48	34	37	23	33	3	6.8	120
32x5/10/20/32/64	$20_{-0.010}$	$68_{-0.013}$	$28_{-0.25}$	19	53	40	43	25	39	4	6.8	90
40x5	$30_{-0.010}$	$80_{-0.013}$	$28_{-0.25}$	19	63	50	53	40	49	6	6.8	60
40 x 10/12/16/20/25/30/40	$25_{-0.005}$	$75_{-0.010}$	$56_{-0.50}$	47	58	45	48	32	44	7	6.5	45
50x5	$35_{-0.010}$	$90_{-0.015}$	$34_{-0.25}$	25	75	59	62	45	58	4	8.8	90
50 x 10/12/16/20/25/30/40	$30_{-0.005}$	$80_{-0.010}$	$56_{-0.50}$	47	63	50	53	40	49	11	6.5	30
63x10/20/40	$40_{-0.010}$	$115_{-0.015}$	$46_{-0.25}$	36	94	71	80	56	70	12	8.5	30
80x10/20/40	$50_{-0.005}$	$140_{-0.010}$	$54_{-0.25}$	45	113	88	100	63	87	12	10.5	30

1) The number of mounting holes can vary upwards

Suitable for screw ends: Form

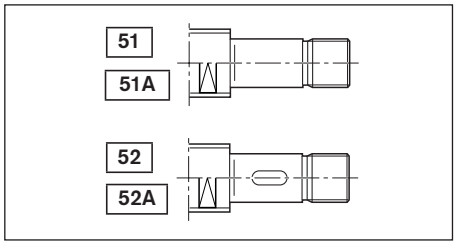

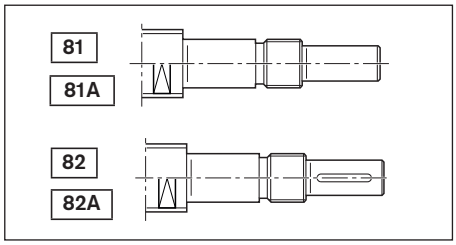

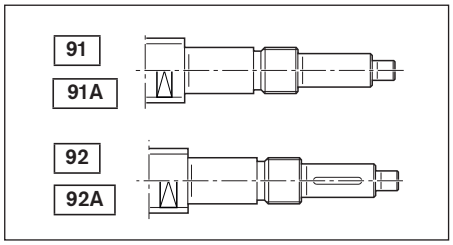

Bearing assembly LAN

Fixed bearing with angular-contact thrust ball bearing LGN

Double-thrust
Series LGN-B-…
LGN-A-…
Double-thrust, in pairs,
Series LGN-C-…

The fixed bearing consists of:
- Angular-contact thrust ball bearing LGN
- Slotted nut NMA..., NMZ...

Separate technical dimensioning to determine the limit values is absolutely necessary for all attachments (e.g. pillow block units, bearing assembly, etc.)

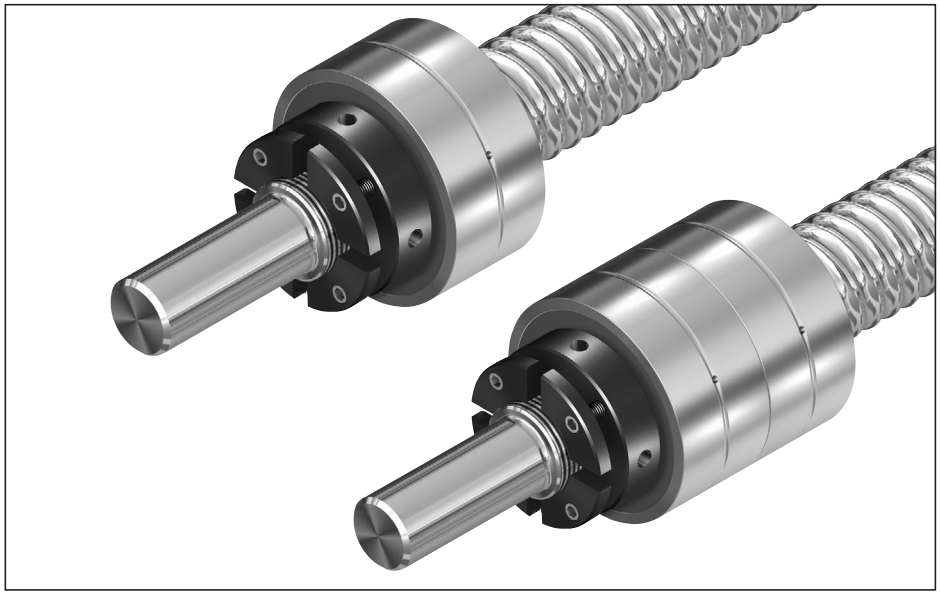

Size	Module	Single parts				Weight complete
		Angular-contact thrust ball bearing		Slotted nut		
d_0 x P	Part number	Abbreviation	Part number	Abbreviation	Part number	(kg)
6 x 1/2	R1590 106 00	LGN-B-0624	R3414 002 06	NMZ 6x0.5	R3446 001 04	0.040
8 x 1/2/2.5/5	R1590 106 00	LGN-B-0624	R3414 002 06	NMZ 6x0.5	R3446 001 04	0.040
12 x 2/5/10	R1590 106 00	LGN-B-0624	R3414 002 06	NMZ 6x0.5	R3446 001 04	0.040
16 x 5/10/16	R1590 110 00	LGN-B-1034	R3414 003 06	NMZ 10x1	R3446 002 04	0.110
20 x 5/10/20/40	R1590 112 00	LGN-B-1242	R3414 004 06	NMZ 12x1	R3446 003 04	0.215
25 x 5/10/25	R1590 117 00	LGN-B-1747	R3414 005 06	NMZ 17x1	R3446 004 04	0.248
	R1590 117 30			NMA 17x1	R3446 014 04	0.290
32 x 5/10/20/32/64	R1590 120 00	LGN-B-2052	R3414 006 06	NMZ 20x1	R3446 005 04	0.345
	R1590 120 30			NMA 20x1	R3446 015 04	0.440
40 x 5	R1590 130 00	LGN-B-3062	R3414 007 06	NMZ 30x1.5	R3446 006 04	0.465
	R1590 130 30			NMA 30x1.5	R3446 016 04	0.590
40 x 10/12/16/20/25/30/40	R1590 225 30	LGN-C-2557	R3414 014 06	NMA 25x1.5	R3446 011 04	0.840
50 x 5	R1590 135 30	LGN-B-3572	R3414 022 06	NMA 35x1.5	R3446 012 04	0.740
50 x 10/12/16/20/25/30/40	R1590 230 30	LGN-C-3062	R3414 023 06	NMA 30x1.5	R3446 016 04	0.980
63 x 10/20/40	R1590 140 30	LGN-A-4090	R3414 024 06	NMA 40x1.5	R3446 018 04	1.250
80 x 10/20/40	R1590 150 30	LGN-A-50110	R3414 025 06	NMA 50x1.5	R3446 019 04	2.930

Size	Load ratings[1)]		Bearing friction torque with sealing disk	Rigidity (axial)	Rigidity against tilting	Limit speed (grease)
	dyn. C	stat. C_0	M_{RL}	R_{fb}	R_{kl}	n_G
d_0 x P	(N)	(N)	(Nm)	N/µm	(Nm/mrad)	(rpm)
6x1/2	6,900	8,500	0.04	200	8	6,800
8x1/2/2.5/5	6,900	8,500	0.04	200	8	6,800
12x2/5/10	6,900	8,500	0.04	200	8	6,800
16x5/10/16	13,400	18,800	0.12	325	25	4,600
20x5/10/20/40	17,000	24,700	0.16	375	50	3,800
25x5/10/25	18,800	31,000	0.24	450	80	3,300
32x5/10/20/32/64	26,000	47,000	0.30	650	140	3,000
40x5	29,000	64,000	0.50	850	300	2,200
40 x 10/12/16/20/25/30/40	44,500	111,000	0.60	1,300	450	2,600
50x5	41,000	89,000	0.60	900	400	2,000
50 x 10/12/16/20/25/30/40	47,500	127,000	0.75	1,500	620	2,200
63x10/20/40	72,000	149,000	1.30	1,200	750	1,600
80x10/20/40	113,000	250,000	2.60	1,400	1,500	1,200

1) See page 187 for load on bearing

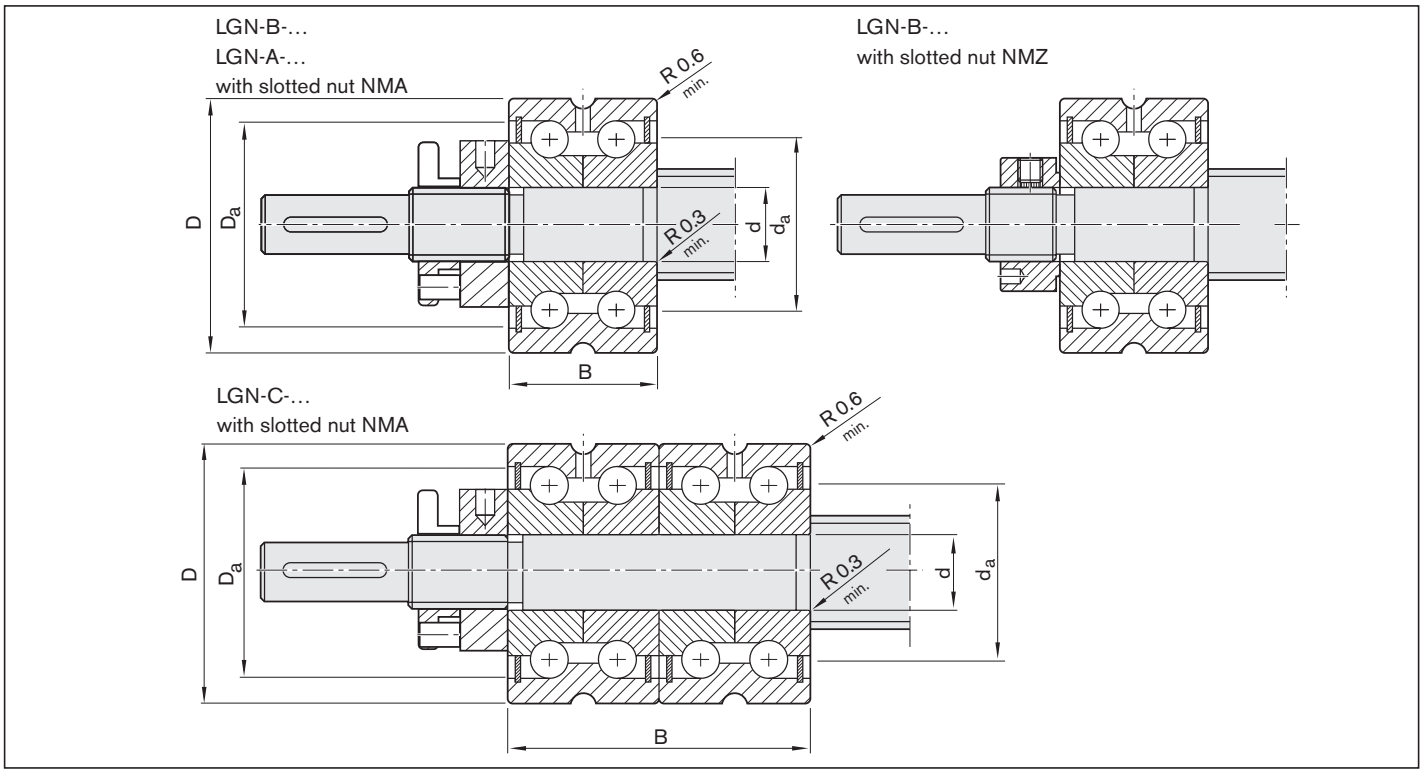

Size	(mm)			Mounting dimensions (mm)			
	d	D	B	D_a		d_a	
d_0 x P				min	max	min	max
6 x 1/2	$6_{-0.010}$	$24_{-0.010}$	$15_{-0.25}$	16	19	9	15
8 x 1/2/2.5/5	$6_{-0.010}$	$24_{-0.010}$	$15_{-0.25}$	16	19	9	15
12 x 2/5/10	$6_{-0.010}$	$24_{-0.010}$	$15_{-0.25}$	16	19	9	15
16 x 5/10/16	$10_{-0.010}$	$34_{-0.010}$	$20_{-0.25}$	25	28	14	24
20 x 5/10/20/40	$12_{-0.010}$	$42_{-0.010}$	$25_{-0.25}$	30	33	16	29
25 x 5/10/25	$17_{-0.010}$	$47_{-0.010}$	$25_{-0.25}$	34	37	23	33
32 x 5/10/20/32/64	$20_{-0.010}$	$52_{-0.010}$	$28_{-0.25}$	40	43	25	39
40 x 5	$30_{-0.010}$	$62_{-0.010}$	$28_{-0.25}$	50	53	40	49
40 x 10/12/16/20/25/30/40	$25_{-0.005}$	$57_{-0.010}$	$56_{-0.05}$	45	48	32	44
50 x 5	$35_{-0.010}$	$72_{-0.011}$	$34_{-0.25}$	59	62	45	58
50 x 10/12/16/20/25/30/40	$30_{-0.005}$	$62_{-0.010}$	$56_{-0.50}$	50	53	40	49
63 x 10/20/40	$40_{-0.005}$	$90_{-0.010}$	$46_{-0.25}$	71	80	56	70
80 x 10/20/40	$50_{-0.005}$	$110_{-0.010}$	$54_{-0.25}$	88	100	63	87

Suitable for screw ends: Form

For screws 8 x 2.5: Form 831, 931
For screws 6 x 1; 6 x 2; 8 x 1; 8 x 2: Form 831

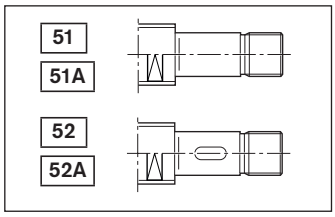

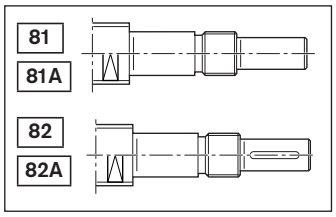

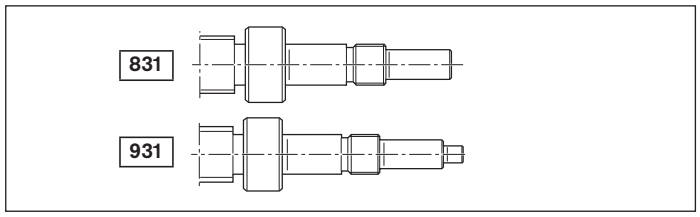

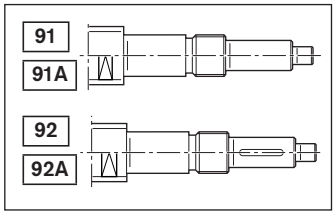

Bearing assembly LAD

Floating bearing with deep-groove ball bearing

The floating bearing system consists of:
- deep-groove ball bearing as per DIN 625... .2RS
- retaining ring DIN 471 (2 pcs)

Separate technical dimensioning to determine the limit values is absolutely necessary for all attachments (e.g. pillow block units, bearing assembly, etc.)

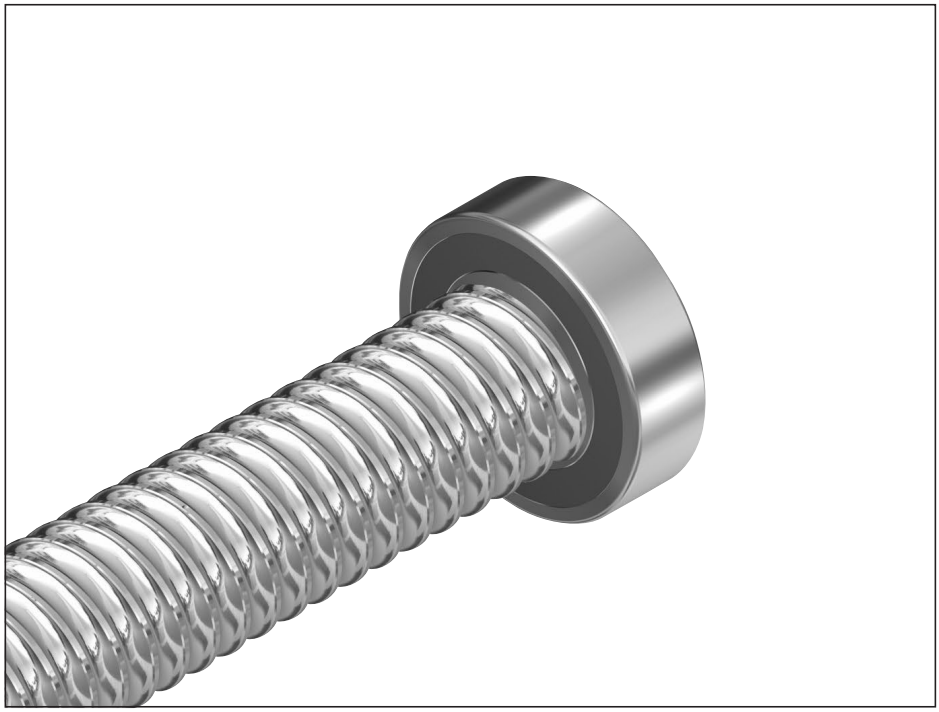

Size		Single parts				Load ratings	
		Deep-groove ball bearing DIN 625		Retaining ring DIN 471			
d_0 x P	Part number	Abbreviation	Part number	Abbreviation	Part number	dyn. C (N)	stat. C_0 (N)
8 x 1/2/2.5/5	R1590 605 00	625.2RS	R3414 048 00	5x0.6	R3410 742 00	1,140	380
12 x 2/5/10	R1590 606 00	626.2RS	R3414 043 00	6x0.7	R3410 736 00	2,450	900
16 x 5/10/16	R1590 610 00	6200.2RS	R3414 049 00	10x1	R3410 745 00	6,000	2,240
20 x 5/10/20/40	R1590 612 00	6201.2RS	R3414 042 00	12x1	R3410 712 00	6,950	2,650
	R1590 615 00	6202.2RS	R3414 074 00	15x1	R3410 748 00	7,800	3,250
25 x 5/10/25	R1590 617 00	6203.2RS	R3414 050 00	17x1	R3410 749 00	9,500	4,150
32 x 5/10/20/32/64	R1590 620 00	6204.2RS	R3414 038 00	20x1.2	R3410 735 00	12,700	5,700
	R1590 625 00	6205.2RS	R3414 063 00	25x1.2	R3410 750 00	14,300	6,950
40 x 5/10/12/16/20/25/30/40	R1590 630 00	6206.2RS	R3414 051 00	30x1.5	R3410 724 00	19,300	9,800
50 x 5/10/12/16/20/25/30/40	R1590 635 00	6207.2RS	R3414 075 00	35x1.5	R3410 725 00	25,500	13,200
63 x 10/20/40	R1590 650 00	6210.2RS	R3414 077 00	50x2	R3410 727 00	36,500	20,800
80 x 10/20/40	R1590 660 00	6212.2RS	R3414 078 00	60x2	R3410 764 00	52,000	31,000

Suitable for screw ends: Form
For screws 8 x 1; 8 x 2: Form 41

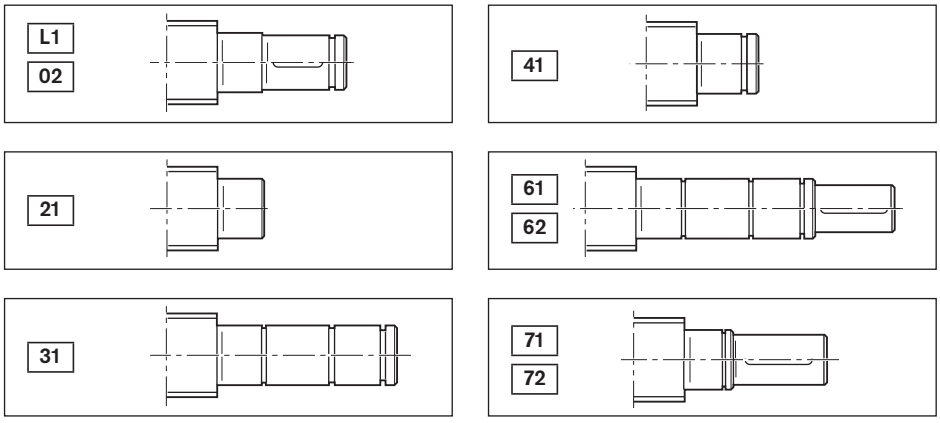

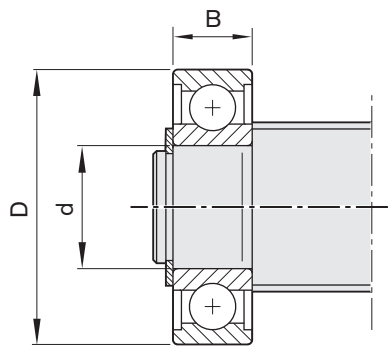

Size	(mm)			Weight complete
d_0 x P	d	D	B	(kg)
8 x 1/2/2.5/5	5	16	5	0.005
12 x 2/5/10	6	19	6	0.008
16 x 5/10/16	10	30	9	0.030
20 x 5/10/20/40	12	32	10	0.035
	15	35	11	0.043
25 x 5/10/25	17	40	12	0.064
32 x 5/10/20/32/64	20	47	14	0.106
	25	52	15	0.125
40 x 5/10/12/16/20/25/30/40	30	62	16	0.195
50 x 5/10/12/16/20/25/30/40	35	72	17	0.288
63 x 10/20/40	50	90	20	0.453
80 x 10/20/40	60	110	22	0.783

Bearing assembly LAL

Fixed bearing with angular-contact thrust ball bearing LGL

Double-thrust, screw-down, for inexpensive designs
The fixed bearing consists of:
- Angular-contact thrust ball bearing LGL
- Slotted nut NMG..., NMZ...

Separate technical dimensioning to determine the limit values is absolutely necessary for all attachments (e.g. pillow block units, bearing assembly, etc.)

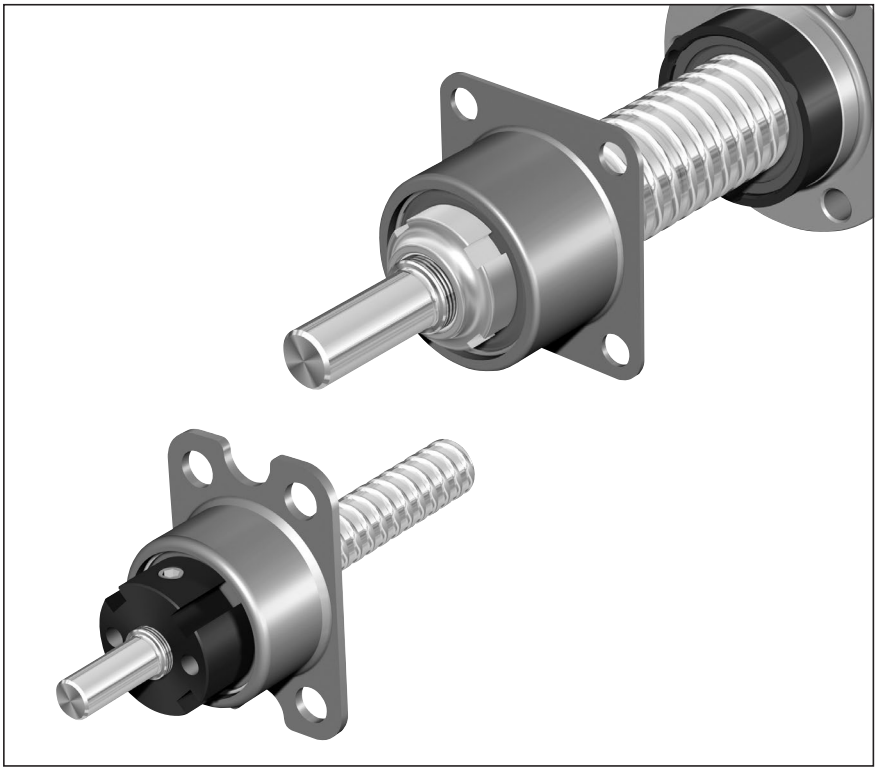

Size	Module	Single parts					
		Angular-contact thrust ball bearing unit				Slotted nut	
				Load ratings[1]			
				dyn. C	stat. C_0		
d_0x P	Part number	Abbreviation	Part number	(N)	(N)	Abbreviation	Part number
6 x 1/2	R1590 406 00	LGL-D-0624	R3414 038 06	1,340	1,250	NMZ 6x0.5	R3446 001 04
8 x 1/2/2.5/5	R1590 406 00	LGL-D-0624	R3414 038 06	1,340	1,250	NMZ 6x0.5	R3446 001 04
12 x 2/5/10	R1590 406 00	LGL-D-0624	R3414 038 06	1,340	1,250	NMZ 6x0.5	R3446 001 04
12 x 5/10	R1590 412 00	LGL-A-1244	R3414 040 06	13,200	17,900	NMG 12x1	R3446 002 02
16 x 5/10	R1590 412 00	LGL-A-1244	R3414 040 06	13,200	17,900	NMG 12x1	R3446 002 02
20 x 5	R1590 412 00	LGL-A-1244	R3414 040 06	13,200	17,900	NMG 12x1	R3446 002 02
25 x 5/10	R1590 415 00	LGL-A-1547	R3414 041 06	16,400	22,400	NMG 15x1	R3446 011 02
32 x 5/10	R1590 420 00	LGL-A-2060	R3414 042 06	27,500	40,000	NMG 20x1	R3446 005 02

1) See page 187 for load on bearing

Suitable for screw ends: Form

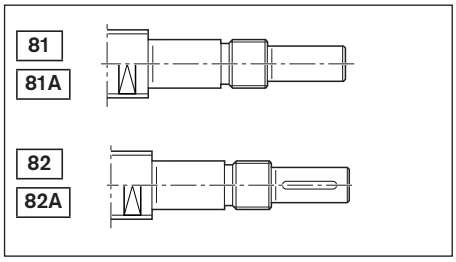

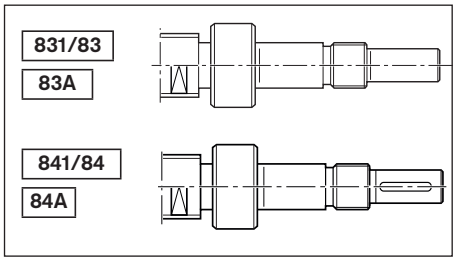

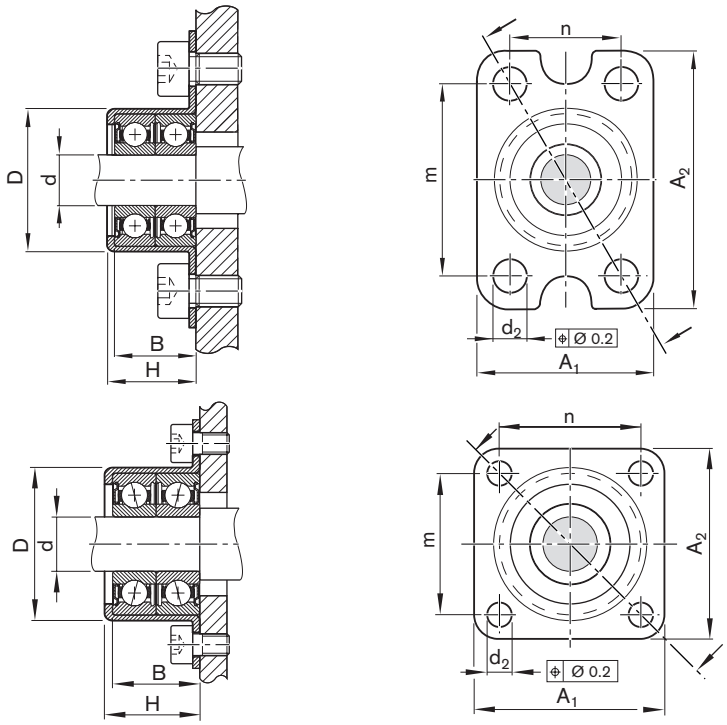

Size	(mm)									Weight of bearing
	d	D	$A_{1)}$	A_2	n	m	H	B	d_2	
d_0x P		+0.03 -0.01					-0.25			(kg)
6 x 1/2	6	20.50	24	35	15	26	13	12	4.5	0.023
8 x 1/2/2.5/5	6	20.50	24	35	15	26	13	12	4.5	0.023
12 x 2/5/10	6	20.50	24	35	15	26	13	12	4.5	0.023
12 x 5/10	12	35.45	44	50	32	38	22	20	6.6	0.120
16 x 5/10	12	35.45	44	50	32	38	22	20	6.6	0.120
20 x 5	12	35.45	44	50	32	38	22	20	6.6	0.120
25 x 5/10	15	38.45	47	51	35	39	24	22	6.6	0.140
32 x 5/10	20	50.45	60	60	47	47	30	28	6.6	0.300

Bearing assembly LAS

Fixed bearing with angular-contact thrust ball bearing LGS

Double-thrust, series LAS-E

The fixed bearing consists of:
- Angular-contact ball bearing LGS as per DIN 628. Not available as a separate part.
- Slotted nut NMA

Separate technical dimensioning to determine the limit values is absolutely necessary for all attachments (e.g. pillow block units, assembly group bearing unit, etc.).

Size d_0 x P	LAS Part number	LGS Abbreviation	Slotted nut Abbreviation	Part number	Weight complete m (kg)	C (kN)	C_0 (kN)	n_G 1) (min^{-1})
16 x 5/10/16	R159A 410 01	LGS-E-1030	NMZ 10x1	R3446 002 04	0.13	20	25.8	13,500
20 x 5/10/20/40	R159A 412 01	LGS-E-1232	NMZ 12x1	R3446 003 04	0.16	21.7	29.2	11,700
25 x 5/10/25 2)	R159A 417 01	LGS-E-1747	NMA 17x1	R3446 014 04	0.29	27.9	31.9	8,550
32 x 5/10/20/32/64	R159A 420 01	LGS-E-2047	NMA 20x1	R3446 015 04	0.57	39.9	63.8	8,550
40 x 5/10/12/16/20/25/30/40	R159A 430 01	LGS-E-3072	NMA 30x1.5	R3446 016 04	1.68	98.3	163.1	5,850
50 x 5/10/12/16/20/25/30/40	R159A 435 01	LGS-E-3580	NMA 35x1.5	R3446 012 04	2.19	111.2	188.5	4,950
63 x 10/20/40	R159A 440 01	LGS-E-4090	NMA 40x1.5	R3446 016 08	2.74	140.8	257.7	4,500
80 x 10/20/40	R159A 450 01	LGS-E-50110	NMA 50x1.5	R3446 019 04	4.95	211.2	392.3	3,600
80 x 10/20/40	R159A 460 01	LGS-E-60130	NMA 60x2	R9130 342 16	7.49	272.5	534.6	3,015

1) Values as a guide for low bearing load, good heat dissipation and suitable lubricating greases with low consistency
2) Version 1+1

Suitable for screw ends: Form

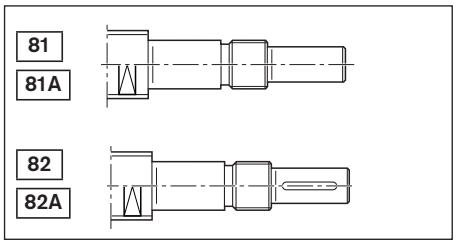

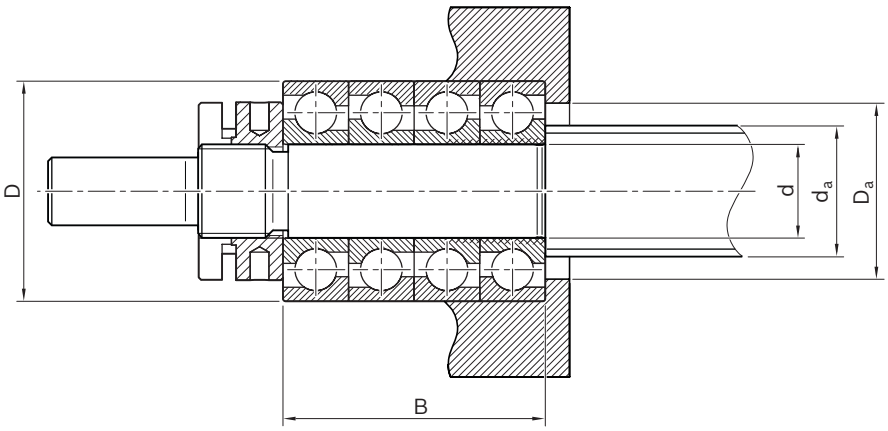

2)

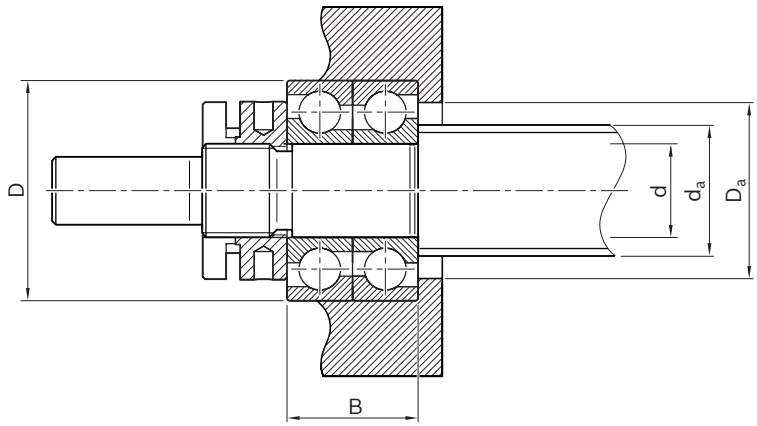

d_0 x P	(mm) d	D	B	D_a min.	D_a max.	d_a min.	d_a max.
16 x 5/10/16	10 $_{-0.008}$	30 $_{-0.009}$	36	22.9	25.8	14.2	22.0
20 x 5/10/20/40	12 $_{-0.008}$	32 $_{-0.011}$	40	25.0	27.8	16.2	24.0
25 x 5/10/25	17 $_{-0.008}$	47 $_{-0.011}$	28	36.2	41.4	22.6	35.0
32 x 5/10/20/32/64	20 $_{-0.010}$	47 $_{-0.011}$	56	36.0	41.0	25.6	35.0
40 x 5/10/12/16/20/25/30/40	30 $_{-0.010}$	72 $_{-0.013}$	76	56.5	65.0	37.0	55.5
50 x 5/10/12/16/20/25/30/40	35 $_{-0.012}$	80 $_{-0.013}$	84	63.0	71.0	44.0	62.0
63 x 10/20/40	40 $_{-0.012}$	90 $_{-0.015}$	92	72.0	81.0	49.0	71.0
80 x 10/20/40	50 $_{-0.012}$	110 $_{-0.015}$	108	89.0	100.0	61.0	88.0
80 x 10/20/40	60 $_{-0.015}$	130 $_{-0.018}$	124	106.0	118.0	72.0	102.0

Slotted Nuts NMA, NMZ and NMG for fixed bearings

Slotted nut NMA

- For maximum vibratory loads
- For new designs

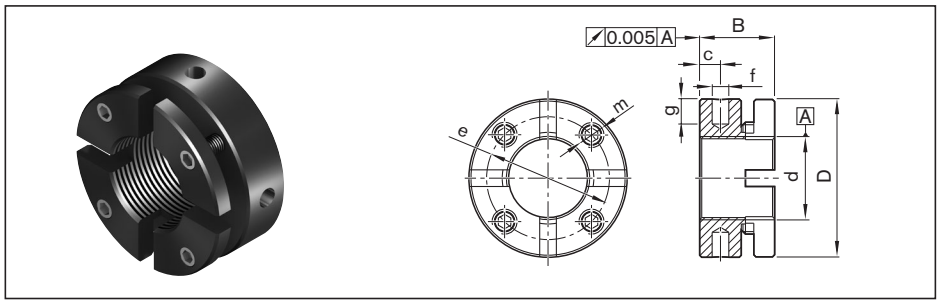

M_A = tightening torque for slotted nut
F_{aB} = axial breaking load of slotted nut
M_{AG} = tightening torque for set screw

Abbreviation	Part number	(mm)								M_A	F_{aB}	M_{AG}	Mass
		d	D	B	c	m	e	f	g	(Nm)	(kN)	(Nm)	(g)
NMA 15x1	R3446 020 04	M15x1	30	18	5	M5	24	4	5	10	100	3	60
NMA 17x1	R3446 014 04	M17x1	32	18	5	M5	26	4	5	15	120	3	70
NMA 20x1	R3446 015 04	M20x1	38	18	5	M6	31	4	6	18	145	5	130
NMA 25x1.5	R3446 011 04	M25x1.5	45	20	6	M6	38	5	6	25	205	5	160
NMA 30x1.5	R3446 016 04	M30x1.5	52	20	6	M6	45	5	7	32	250	5	200
NMA 35x1.5	R3446 012 04	M35x1.5	58	20	6	M6	51	5	7	40	280	5	230
NMA 40x1.5	R3446 018 04	M40x1.5	65	22	6	M6	58	6	8	55	350	5	300
NMA 45x1.5	R9130 342 15	M45x1.5	70	22	6	M6	63	6	8	65	360	5	340
NMA 50x1.5	R3446 019 04	M50x1.5	75	25	8	M6	68	6	8	85	450	5	430
NMA 60x2	R9130 342 16	M60x2.0	90	26	8	M8	80	6	8	100	550	15	650
NMA 70x2	R9130 342 17	M70x2.0	100	28	9	M8	90	8	10	130	650	15	790
NMA 90x2	R9163 113 51	M90x2.0	130	32	13	M10	118	8	10	200	900	20	1,530

NMA 15 to NAM 40 with 4 segments
NMA 45 to NAM 90 with 6 segments

Slotted nut NMZ

- For existing designs
- For timing belt side drive
- For driven nuts

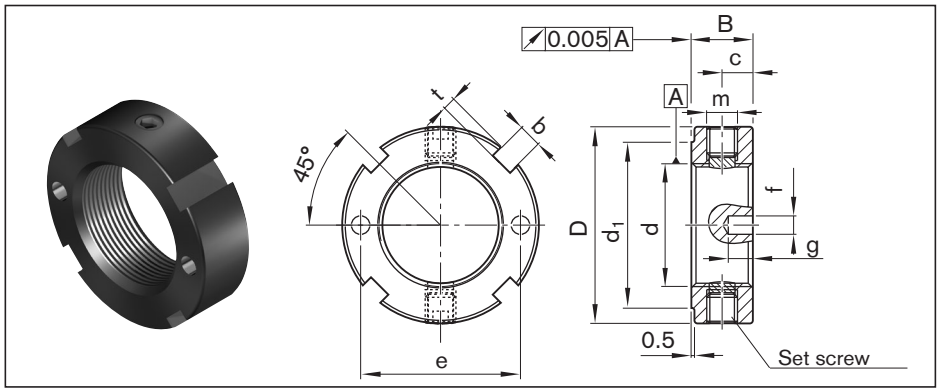

M_A = tightening torque for slotted nut
F_{aB} = axial breaking load of slotted nut
M_{AG} = tightening torque for set screw

Abbreviation	Part number	(mm)											M_A	F_{aB}	M_{AG}	Mass
		d	D	B	d_1	c	m	b	t	e	f	g	(Nm)	(kN)	(Nm)	(g)
NMZ 6x0.5	R3446 001 04	M6x0.5	16	8	12	4	M4	3	2.0	11.0	2.5	3.5	2	17	1	10
NMZ 10x1	R3446 002 04	M10x1	18	8	14	4	M4	3	2.0	14.0	2.5	3.5	6	31	1	10
NMZ 12x1	R3446 003 04	M12x1	22	8	18	4	M4	3	2.0	17.0	2.5	3.5	8	38	1	15
NMZ 17x1	R3446 004 04	M17x1	28	10	23	5	M5	4	2.0	22.5	3.0	4.0	15	57	3	28
NMA 20x1	R3446 005 04	M20x1	32	10	27	5	M5	4	2.0	26.0	3.0	4.0	18	69	3	35
NMZ 25x1.5	R3446 007 04	M25x1.5	45	20	40	10	M6	5	2.0	35.0	4.0	5.0	25	211	5	55
NMA 30x1.5	R3446 006 04	M30x1.5	45	12	40	6	M6	5	2.0	37.5	4.0	5.0	32	112	5	75
NMZ 45x1.5	R3446 032 04	M45x1.5	65	14	59	7	M6	6	2.5	–	–	–	65	181	5	170
NMZ 55x2	R3446 033 04	M55x2	75	16	68	8	M6	7	3.0	–	–	–	95	229	5	230
NMZ 60x2	R3446 031 04	M60x2	80	16	73	8	M6	7	3.0	–	–	–	100	255	5	250
NMZ 70x2	R3446 034 04	M70x2	92	18	85	9	M8	8	3.5	–	–	–	130	305	15	360
NMZ 80x2	R3446 035 04	M80x2	105	18	95	9	M8	8	3.5	–	–	–	160	355	15	460
NMZ 90x2	R3446 036 04	M90x2	120	20	108	10	M8	10	4.0	–	–	–	200	410	15	700

Assembly tool for slotted nut

General-purpose socket wrench insert for slotted nuts NMA / NMZ
– Available on request

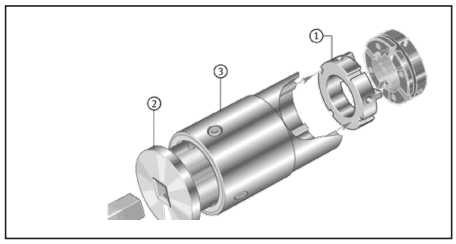

NMA: consisting of components: AMS, ZMS and ZME

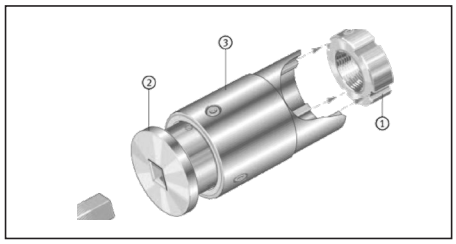

NMZ: consisting of components: ZMS and ZME

Slotted nut NMG

– For inexpensive designs

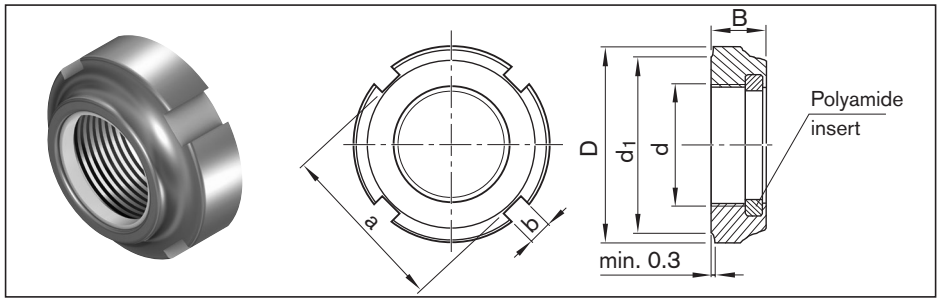

Abbreviation	Part number	Dimensions (mm)						M_A	Mass
		d	D	B	d_1	a	b	(Nm)	(g)
NMG 12x1	R3446 002 02	M12x1	21	7.6	18	18	3	8	10
NMG 15x1	R3446 011 02	M15x1	24	8.6	21	21	4	10	13
NMG 20x1	R3446 005 02	M20x1	32	9.6	27	27	4	18	24

M_A = tightening torque for slotted nut

Ring nut GWR

– For angular-contact thrust ball bearing LGN
– For cylindrical single nut ZEM-E-S

Attention:
Use a threadlocker (for example, Loctite 638) to secure against loosening

M_A = tightening torque for housing nut

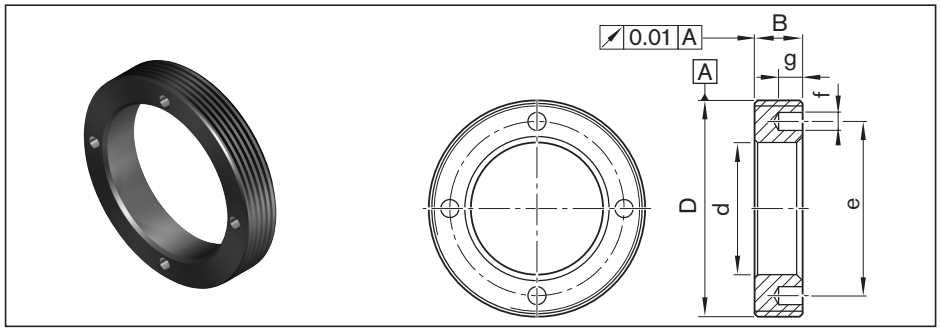

Abbreviation	Part number	Dimensions (mm)						M_A	Mass
		D	d	B	e	f	g	(Nm)	(g)
GWR 18x1	R1507 040 33	M18x1	8.5	8	12.5	2.5	3	6	10.0
GWR 23x1	R1507 240 35	M23x1	13.0	8	18.0	2.5	3	8	15.0
GWR 26x1.5	R1507 240 22	M26x1.5	16.5	8	20.5	2.5	3	10	16.5
GWR 30x1.5	R1507 340 34	M30x1.5	17.0	8	23.0	3.0	4	20	29.0
GWR 36x1.5	R1507 040 23	M36x1.5	22.0	8	29.0	3.0	4	25	35.0
GWR 40x1.5	R1507 140 03	M40x1.5	25.0	8	33.0	3.0	4	28	39.5
GWR 45x1.5	R1507 240 04	M45x1.5	28.0	8	38.0	3.0	4	30	55.0
GWR 50x1.5	R1507 240 25	M50x1.5	31.0	10	40.0	4.0	5	45	86.0
GWR 55x1.5	R1507 340 05	M55x1.5	36.0	10	46.0	4.0	5	50	96.0
GWR 58x1.5	R1507 440 32	M58x1.5	43.0	10	50.0	4.0	5	58	84.0
GWR 60x1	R1507 440 28	M60x1	43.0	10	51.0	4.0	5	60	97.0
GWR 62x1.5	R1507 440 29	M62x1.5	43.0	12	53.0	5.0	6	60	127.0
GWR 65x1.5	R1507 440 26	M65x1.5	47.0	12	55.0	4.0	5	70	136.0
GWR 70x1.5	R1507 440 06	M70x1.5	42.0	12	58.0	4.0	5	75	216.0
GWR 78x2	R1507 567 27	M78x2	54.0	15	67.0	6.0	7	90	286.0
GWR 92x2	R1507 640 09	M92x2	65.0	16	82.0	6.0	7	125	385.0
GWR 95x2	R1507 667 28	M95x2	68.0	16	82.0	6.0	7	130	425.0
GWR 112x2	R1507 740 11	M112x2	82.0	18	100.0	8.0	8	175	596.0
GWR 115x2	R1507 767 29	M115x2	85.0	18	100.0	8.0	8	200	664.0

Ball screw assembly with front lube unit

Characteristic features

Equipped with Rexroth's functionally reliable, series-made front lube unit, a ball screw assembly can attain an exceptionally long travel life without relubrication. Thanks to intensive development work and thorough testing under realistic conditions, the use of front lube units combined with prelubricated nuts enables you to achieve lifelong, optimal lubrication of Rexroth precision ball screw assemblies.
From its built-in oil reservoir, the front lube unit delivers the precise amount of oil required to replenish the used amounts of oil in the soap matrix of the grease. The oil is applied directly to the raceway of the ball screws via the low-friction point-contact zone of the open-pored foam. This optimized delivery minimizes lubricant consumption and allows you to achieve lifelong lubrication.

Ecologically sound

The front lube unit ideally combines eco-friendliness with cost-efficiency. It minimizes oil consumption and keeps the surroundings clean. This helps to conserve resources.

Further highlights

- Delivered with the ball screw assembly ready-mounted.
- Attaches to one side of the nut, thus saving space.
- Can be used in all mounting positions, both in horizontal and vertical installations.
- Available for almost all nut types with diameters 20 to 40
- Easy to integrate in constructions by attaching it either on the flange side or on the opposite side of the single-start nuts.
- When attached to both sides, it also meets the lubrication needs of high-capacity two-start nuts (FED-E-B).
- Can be used in all normal ambient conditions, except in wet or dusty environments.

Lubrication concept

This logo indicates that the Rexroth ball screw assembly with prelubed nut and front lube unit are lubed for life.

Note: The front lube unit is not suitable for use with driven nuts.

Lifelong lubrication

The effective life of the Rexroth front lube unit matches the service life curve of the Ball Screw Assembly. When operated within the recommended load limits, a ball screw assembly equipped with a Front Lube Unit will require no relubrication, thanks to the optimal delivery of lubricant. Based on our extensive tests, the lubrication performance of the front lube unit can now be reliably predicted for the first time. With a Front Lube Unit from Rexroth, a ball screw assembly can run trouble-free for **five years** or **300 million revolutions** without any relubrication.

Structural design of front lube units

1 Seal
2 Housing and cover
  – Material: special plastic
3 Open-pored foam
4 Housing nut
5 Intermediate ring
6 Recirculation cap
7 Ball nut
8 Ball screw

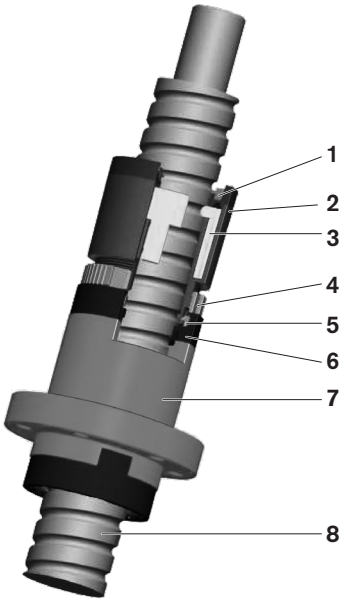

Notes

When selecting the size for the stroke, consider the dimensions of the VSE.
When setting up a system, do not allow the VSE to collide with a stop or other components.

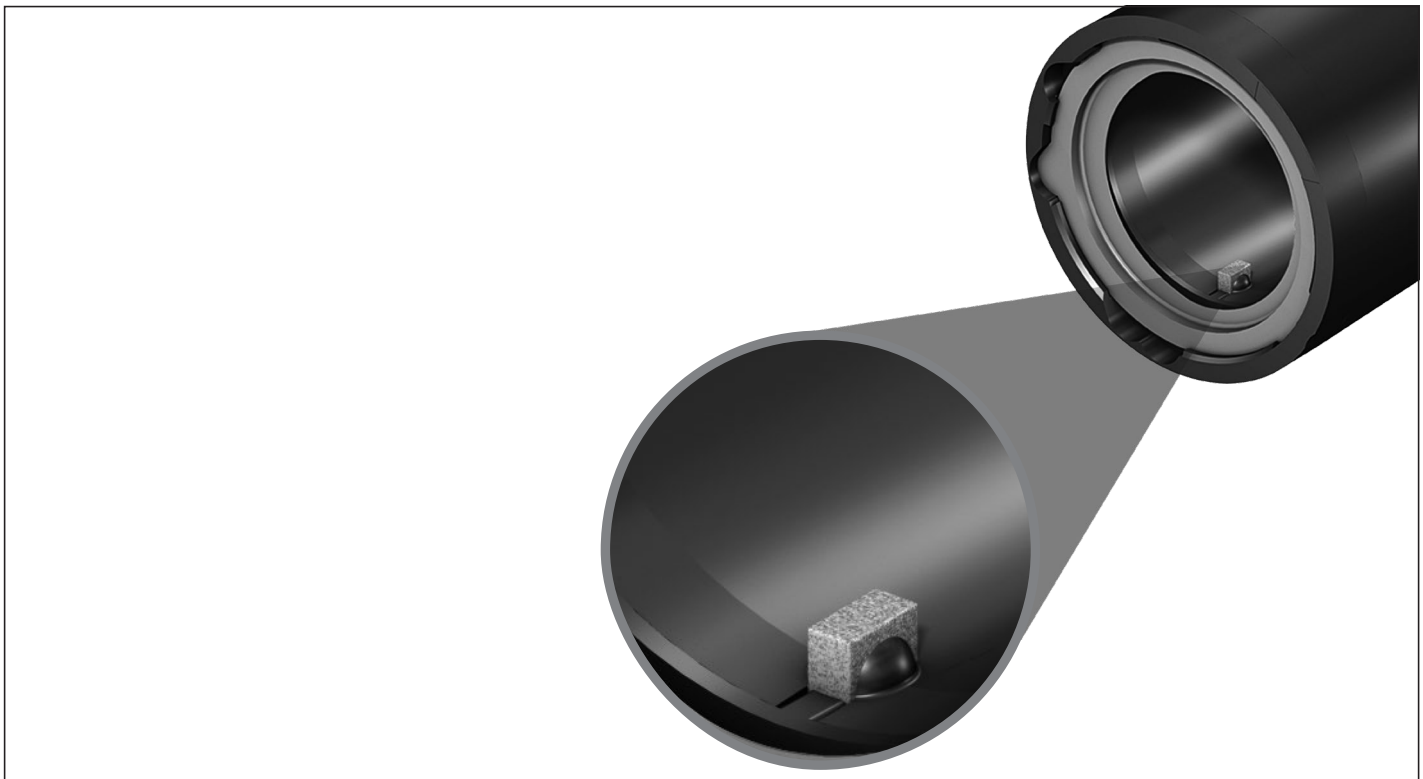

Contact zone of the open-pored foam

Ball nut with front lube unit

Front lube unit

The front lube unit (VSE) has been designed for the long-term, maintenance-free operation of the ball screw assembly. It is attached to the nut and delivers lube oil continuously to the rolling elements.
For travel up to 300 million revolutions without relubrication.

The front lube unit can be combined with the following nut types:
- FEM-E-S
- FEM-E-B
- SEM-E-S
- SEM-E-C
- FED-E-B
- FDM-E-S
- FDM-E-B

Lifelong lubrication

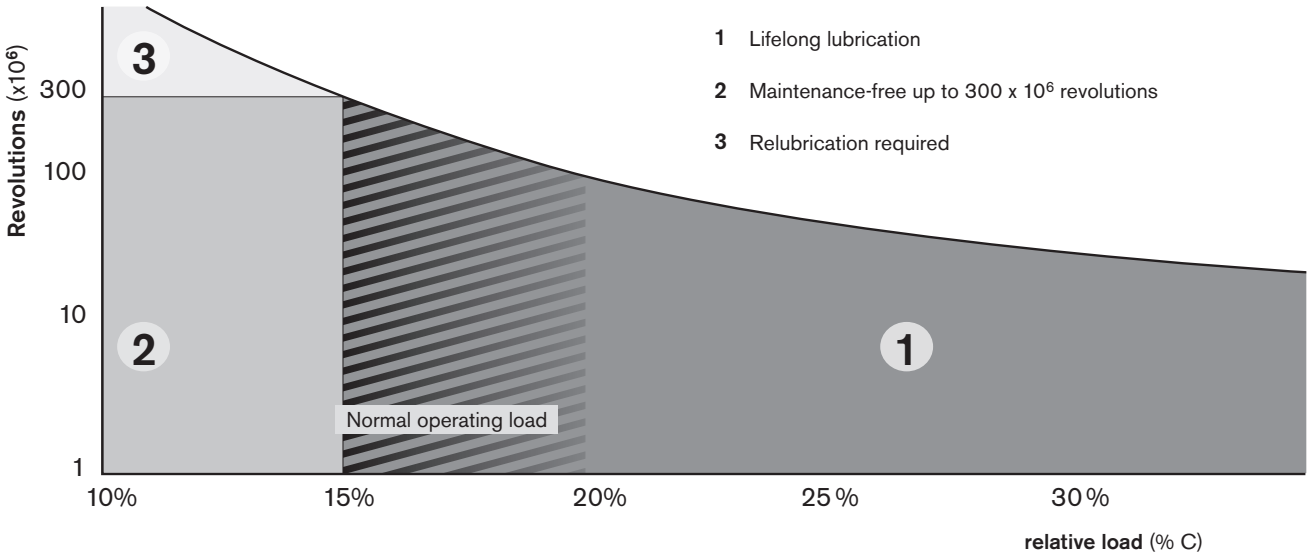

Results confirmed by our extensive tests:

1 For axial loads of 15-35% of the dynamic load rating C, the ball nut will be lubed for life.

2 For axial loads of < 15% of the dynamic load rating C, the ball screw assembly will require no maintenance for up to 300 million revolutions.

3 After 300 million revolutions, the ball nut should be relubricated as usual. The front lube unit does not have to be removed from the nut.

Lead (mm)	**Travel s with front lube units**[1] (km)
5	1,500
10	3,000
20	6,000
32	9,600
40	12,000

1) max. load up to 0.15C

Technical data

Ball screw assembly with front lube unit

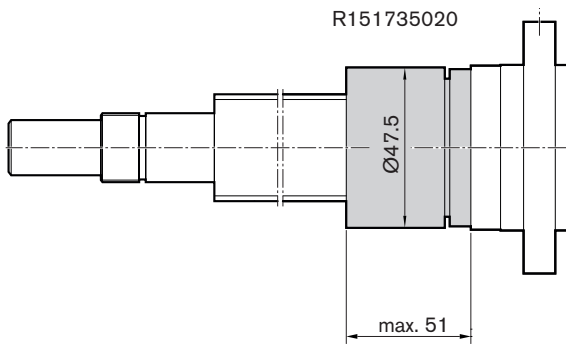

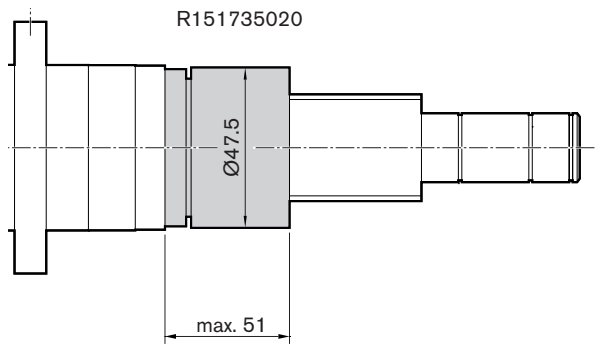

Front lube unit

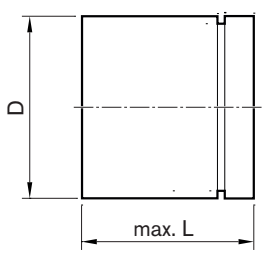

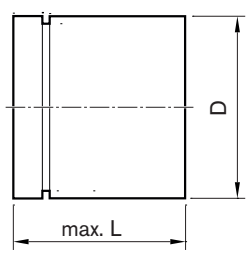

Note: The front lube unit is delivered ready-mounted to the ball screw assembly. Only installation by the manufacturer is permitted.

Size of VSE d_0 **x P**	**Part number**	(mm) **D**	**L**	**Weight** (kg) **m**
20 x 5 R	R151715000	32.60	51.00	0.021
20 x 20 R				
25 x 5 R	R151725010	37.50	51.00	0.027
25 x 10 R				
25 x 25 R				
32 x 5 R	R151735030	47.50	51.00	0.042
32 x 10 R				
32 x 20 R				
32 x 32 R				
40 x 5 R	R151745030	55.50	53.00	0.055
40 x 10 R	R151745050	62.30	51.00	0.070
40 x 20 R				
40 x 40 R				

Ball nut with front lube unit

Ordering example for front lube unit with illustration of mounting orientation

BASA	32 x 10R x 3,969	FEM-E-S - 5	00	1	3	T7	R	81K203	31K200	1000	0	2

Front lube unit on left, nut with initial greasing

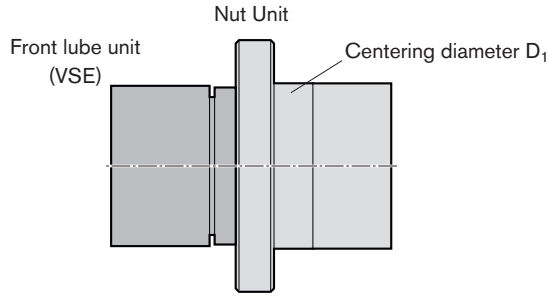

BASA	32 x 10R x 3,969	FEM-E-S - 5	00	1	3	T7	R	81K203	31K200	1000	0	3

Front lube unit on right, nut with initial greasing

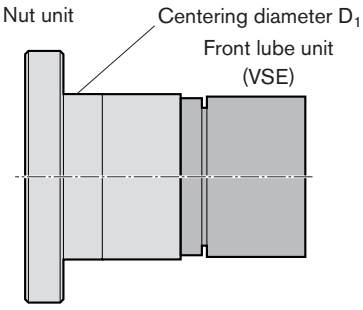

BASA	40 x 20R x 6	FED-E-B - 8	00	1	3	T7	R	81K250	31K300	1000	0	4

Front lube unit on two sides, nut with initial greasing

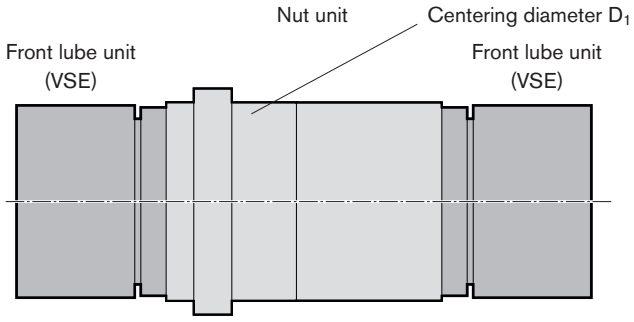

Mounting orientation of the front lube unit on nut types

Nut type	Mounting orientation
FEM-E-S	2, 3
FEM-E-B	2, 3
SEM-E-S	2, 3
SEM-E-C	2, 3
FED-E-B	4
FDM-E-S	2, 3
FDM-E-B	2, 3

Measuring pads

Alignment of the ball screw assembly in the machine

A gauge with a self-aligning contact pad is available from Rexroth for easy alignment of the ball screw assembly.

Two pads of different lengths are available which can be used depending on the screw lead:
- Part number R3305 131 19, length 33 mm for leads < 20
- Part number R3305 131 21, length 50 mm for leads > 20

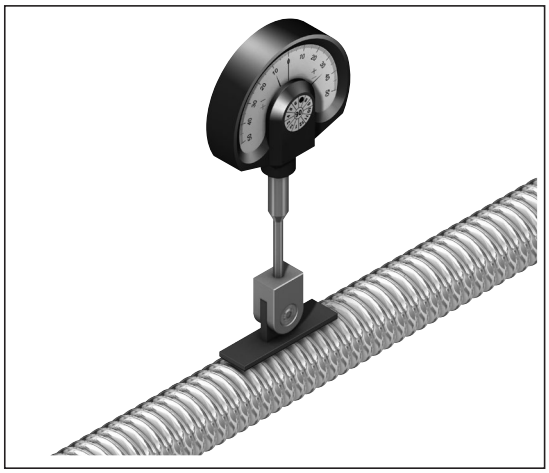

Dial gauge not supplied as standard with the ball screw assembly

Arrestor nut

Assembly/set-up/ features
- Installation on flange with hexagon socket screws for fixing the arrestor nut
- Centering diameter prevents radial displacement
- Wiper seal is not mounted on the nut, but on the arrestor nut. (This keeps dirt out of the space between the arrestor nut and the screw)
- Length of the safety nut determines the safety factor (Standard: 2-fold safety as against the static load capacity)
- Multiple-thread arrestor nuts are used for multiple-thread screws

Recommended installation
The force or mass must always lie on the arrestor nut so that there is no tensile loading of the fastening screws.
The fixed bearing of the screw should be located at the bottom.
Inspection may only be carried out by trained service engineers.

Design
Please consult our staff

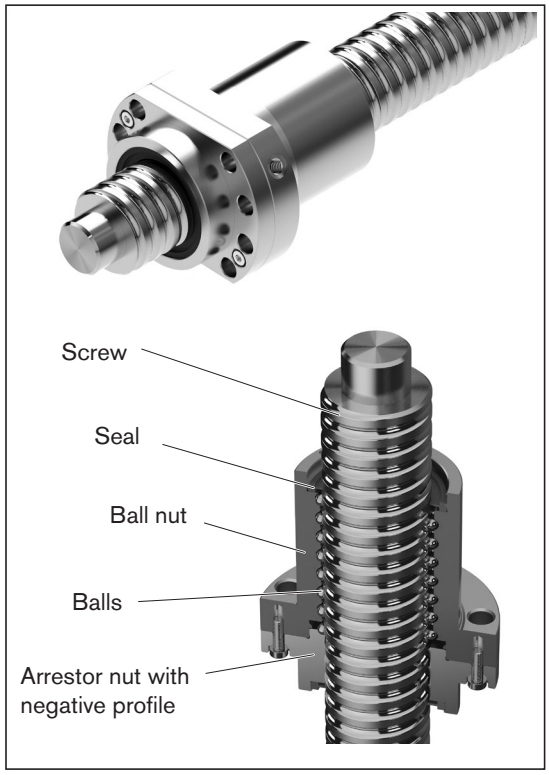

Mode of operation
The ball nut with arrestor nut comprises the ball nut (for example, FEM-E-B) and an additional arrestor nut whose negative profile locks into the screw raceway. The ball nut with arrestor nut basically works in the same way as a normal ball nut. If the ball nut fails to work (for example, owing to a loss of balls), the arrestor nut thread comes into contact with the screw. This prevents an uncontrolled dropping of the nut.

Use
In critical applications in non-horizontal operation (for example, in order to prevent damage to property). The arrestor nut is fitted to the nut from below in the direction of force.
Arrestor nuts are not safety components within the meaning of the European Machinery Directive 2006/42/EC. Responsibility for the safety of the structural design / specific application therefore still lies with you and the manufacturer. Particular attention must be paid to ensuring that there are no hazards to people. Therefore, in particular in the case of vertically loaded axes, the structure must incorporate an additional safety catch/holding device which prevents a drive component failure! The falling of the nut must be prevented in all cases.

Technical notes

ISO 3408-1 defines a ball screw assembly as follows:

A ball screw drive (BASA) is a unit consisting of a ball screw shaft, ball nut, and balls that is able to convert rotary motion into linear motion, and vice versa.

Advantages over the acme screw drive
- The maximum mechanical efficiency of an Acme screw drive is 50%, whereas a planetary screw assembly can achieve 90%, and a ball screw assembly 98%.
- Higher life expectancy due to negligible wear during operation
- Less drive power required
- No stick-slip effect
- More precise positioning
- Higher travel speed
- Less heat-up

Due to the high level of effectivity (low friction level between the screw and the nut), ball screw drives are not self-locking.

⚠ Safety information
If installing in a non-horizontal position, customers should check whether separate protection against falling loads is necessary, e.g. an arrestor nut. With particularly critical applications in vertical operation, we recommend installing arrestor nuts.
Please consult us.

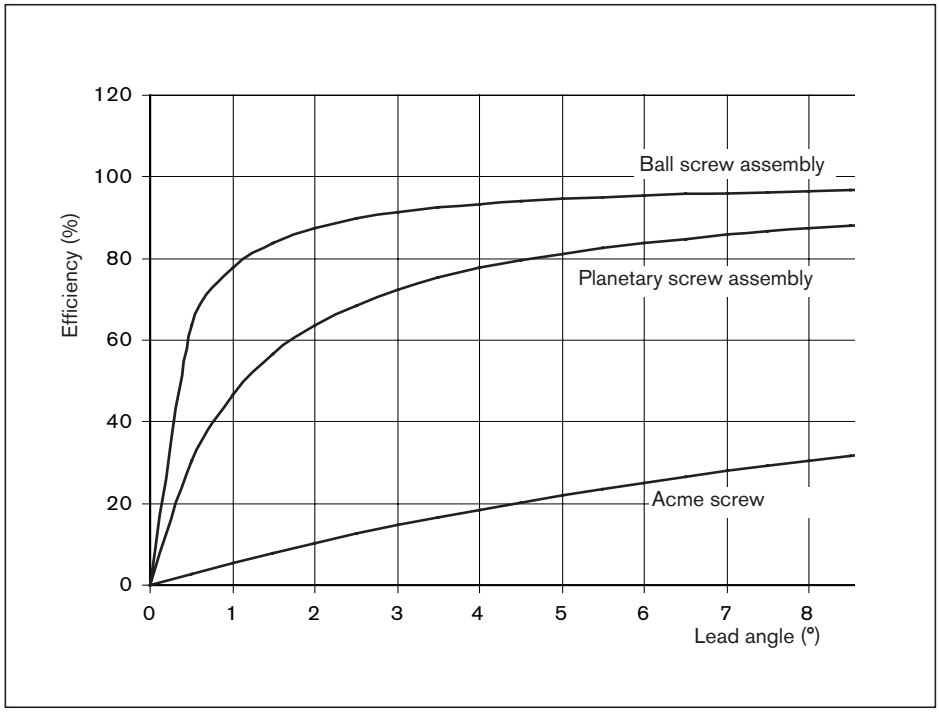

Selection criteria for ball screw drives

The factors below are significant when rating a ball screw drive:
- Degree of accuracy required (lead deviation)
- Load
- Service life
- critical speed
- buckling load
- rigidity/permissible clearance or desired preload
- characteristic speed (max. permissible linear speed)

The following points should be taken into consideration when selecting a PLSA that is to be both cost-efficient and optimally designed:
- The lead is a crucial factor in the load-bearing capacity (conditional on the maximum possible ball diameter) and the drive torque.
- The calculation of the service life should be based on average loads and average speeds, not on maximum values.
- In order for us to provide you with a customized solution, installation drawings or sketches of the nut environment should be enclosed.

⚠ Note

Radial and eccentric forces relative to the screw must be avoided, as they can negatively affect the ball screw drive's performance and shorten its service life.

Where special conditions of use are involved, please consult us.

Load ratings and service life
The calculations for the load capacities and service lives are based on ISO 3408-5. The dynamic load capacities in the tables are above the ISO 3408-5 values. These values have been confirmed in tests.

Static load rating C_0
The static load rating is an axial, concentrically acting force that induces a permanent deformation of 0.0001 x the ball diameter between the ball and the ball track.

Dynamic load rating C
The dynamic load rating is an axial, concentrically acting force of constant magnitude and direction under which 90% of a sufficiently large number of identical BASAs can achieve a nominal service life of one million revolutions.

Correction factor for tolerance grades
The static load rating C_0 and the dynamic load rating C must be multiplied by the correction factor f_{ac} as appropriate for the specific tolerance grade of the screw.

Tolerance grade T	3	5	7	9
f_{ac}	1	1	0,9	0,8

Service life
The nominal service life is expressed by the number of revolutions (or number of operating hours at constant speed) that will be attained or exceeded by 90% of a representative sample of identical BASAs before the first signs of material fatigue become evident. The nominal life is designated as L or L_h h, depending on whether it is specified in revolutions or hours.

Short stroke
Short stroke applications = stroke ≤ nut length
Lubrication:
During a short stroke, the planets do not make a real turn. It is therefore impossible for an adequate lubricating film to form. This may result in premature wear.
To avoid this, it is sufficient to perform longer strokes at regular intervals with simultaneous relubrication as “lubricating strokes”.
Please consult our regional centers regarding short stroke applications.
You can find your local contact person at: www.boschrexroth.com/contact

Load rating:
Short stroke applications will increase the number of times a rolling load passes over each point within the load zone.
This reduces the load rating.

Critical speed and buckling load
The critical speed and buckling load can be checked using the corresponding charts.
For precise calculations
see formula 12 15 , in the section “Design Calculations3.”

Characteristic speed $d_0 \cdot n$
Due to their structural design, Rexroth ball screw assemblies can be operated at very high speeds. Characteristic speeds of up to 150,000 are possible depending on the nut type.

$d_0 \cdot n$	≤	**150,000**	
d_0	=	**nominal diameter**	**(mm)**
n	=	**speed**	**(rpm)**

The theoretically possible maximum linear speed v_{max} (m/min) is specified on the page featuring the relevant nut. Actually attainable speeds are heavily dependent among other factors on preload and duty cycle. They are generally restricted by the critical speed. (See “Design Calculations”).

Material, hardness
BASAs are made of high-quality, heat-treatable steel, carbon chrome alloy steels or case-hardened steels. The screw and nut raceways have a minimum Rockwell hardness of HRC 58.
Ball screw drives made from stainless steel (DIN EN 10088) are available on request.
Normally, the screw ends are not hardened.

Sealing
Ball screw drives need protection from contamination. Flat protective covers, bellows-type dust boots, or the AGK drive unit are particularly suitable for this. Since there are many applications in which these methods do not provide sufficient protection, we have developed a gapless lip-type seal which ensures an optimal sealing effect and maintains high efficiency due to the low friction level. This means that the standard versions of our ball screw drives are supplied with seals. At the customer’s request, the seals can be omitted entirely or special seals are used. For applications where it appears that it is not possible to avoid severe contamination of the screw, we have developed a reinforced variant of the standard seal. The sealing effect has been enhanced even further by increasing the preload. You should note the considerably higher frictional torque (see the technical data) compared to standard seals which leads to greater heat generation. You can easily recognize the reinforced seal by its dark-green color.

Permissible operating temperatures
Ball screw drives permit operation at continuous temperatures of up to 80 °C with temporary peaks of 100 °C (measurements taken on the outer shell of the nut in each case).

Permissible operating temperatures:
$-10\ °C \leq T_{operation} \leq 80\ °C$

Permissible storage temperature
$-15\ °C \leq T_{bearing} \leq 80\ °C$

Bearing
When calculating the life expectancy of the overall system, the end bearings must be considered separately.

Acceptance Conditions and Tolerance Grades

Permissible travel deviation

According to ISO 3408-3

Symbol definitions: (excerpt)

l_0 = nominal travel
l_1 = thread length
Δl_0 = travel deviation
l_u = Useful travel
l_e = excess travel (the closer tolerances for travel and hardness do not apply here)
c = travel compensation (target travel deviation) (standard: c = 0)
e_p = tolerance mean target travel deviation
ν_{300p} = permissible travel deviation within 300 mm travel
a = actual
p = permissible

T **Ball screw assembly with precision screw**

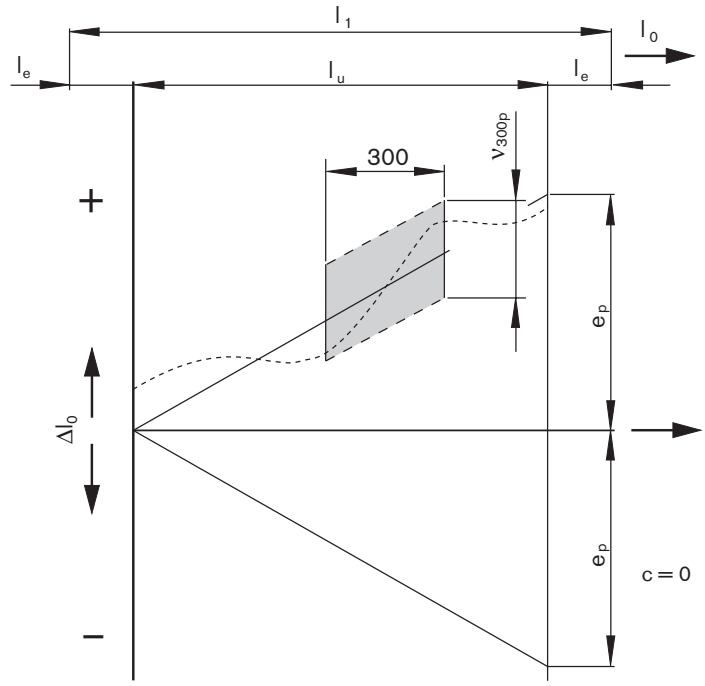

Tolerance grades of precision screws

Tolerance grade			
3	**5**	**7**	**9**

Permissible travel deviation within 300 mm travel

ν_{300p} (µm) Tolerance grade			
3	**5**	**7**	**9**
12	23	52	130

Permissible target travel deviation

Useful travel l_u		Tolerance for target travel e_p (µm) Tolerance grade			
>	≤	**3**	**5**	**7**	**9**
0	100	8	18	44	110
100	200	10	20	48	120
200	315	12	23	52	130
315		$e_p = \frac{l_u}{300} \cdot \nu_{300p}$			

Non-usable length l_e
(Excess travel)
Modified compared to ISO 3408-3

d_0 (mm)	l_e (mm)
6, 8	15
12, 16	20
20, 25, 32, 40	40
50, 63, 80	50

Minimum number of measurements within 300 mm (measuring interval) and excess travel to be taken into consideration.

Lead P	**Minimum number of measurements for tolerance grade**			
(mm)	**3**	**5**	**7**	**9**
1	10	6	3	2
2	10	6	3	2
2.5	10	6	3	2
5	10	6	3	2
10	5	3	1	1
12	5	3	1	1
16	5	3	1	1
20	4	3	1	1
25	4	3	1	1
30	3	2	1	1
32	3	2	1	1
40	2	1	1	1
64	2	1	1	1

Acceptance conditions and tolerance grades

Run-outs and location deviations

Based on DIN ISO 3408-3

Radial run-out t_5 of the outer diameter of the screw over the length l_5 used to determine the straightness relative to AA'.

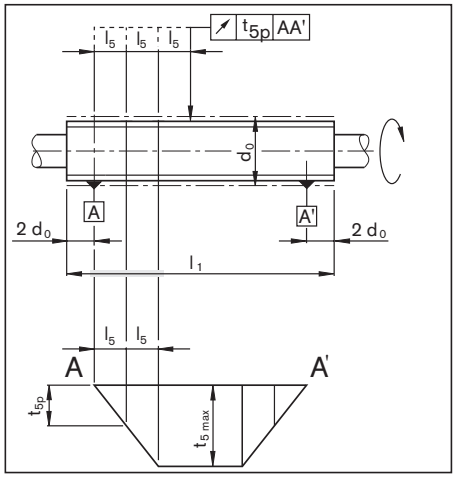

d_0 Over	d_0 Up to	l_5	t_{5p} in µm for l_5 for tolerance grade 3	5	7	9
= 6	12	80	25	32	40	60
12	25	160				
25	50	315				
50	100	630				

l_1/d_0 Over	l_1/d_0 Up to	t_{5max} in µm for $l_1 \geq 4\ l_5$ Tolerance grade 3	5	7	9
	40	50	64	80	120
40	60	75	96	120	180
60	80	125	160	200	300
80	100	200	256	320	480

Coaxial deviation t_6 of the bearing journal in relation to AA' where $l_6 \leq l$.
Table value t_{6p} applies if $l_6 \leq$ reference length l.

Where $l_6 > l$, then $t_{6a} \leq t_{6p} \cdot \frac{l_{6a}}{l}$

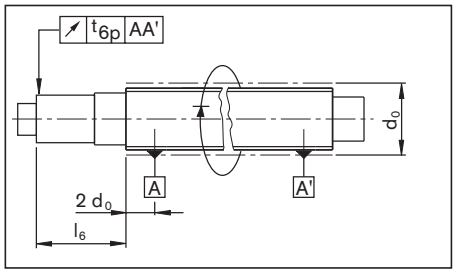

Nominal diameter d_0 Over	Nominal diameter d_0 Up to	Reference length l	t_{6p} in µm for $l_6 \leq l$ Tolerance grade 3	5	7	9
= 6	20	80	12	20	40	50
20	50	125	16	25	50	63
50	125	200	20	32	63	80

Radial run-out t_7 of the journal diameter of the ball screw shaft relative to the bearing diameter for $l_7 \leq l$.
Table value t_{7p} applies if $l_7 \leq$ reference length l.

Where $l_7 > l$, then $t_{7a} \leq t_{7p} \cdot \frac{l_{7a}}{l}$

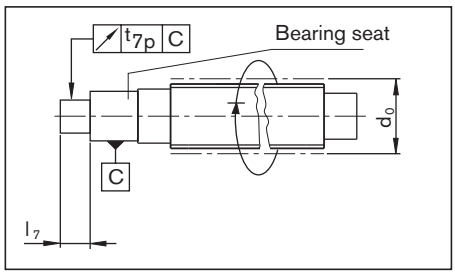

Nominal diameter d_0 Over	Nominal diameter d_0 Up to	Reference length l	t_{7p} in µm for $l_7 \leq l$ Tolerance grade 3	5	7	9
= 6	20	80	6	8	12	14
20	50	125	8	10	16	18
50	125	200	10	12	20	23

Axial run-out t_8 of the shaft (bearing) face of the ball screw shaft relative to the bearing diameter.

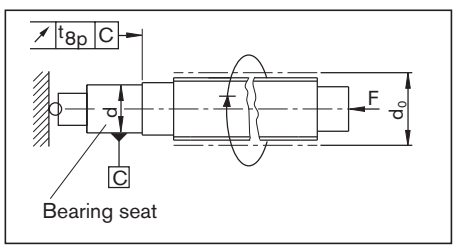

Nominal diameter d_0 Over	Nominal diameter d_0 Up to	t_{8p} in µm for tolerance grade 3	5	7	9
= 6	63	4	5	6	8
63	125	5	6	8	10

Axial run-out t_9 of the ball nut location face in relation to **A** and **A'** (for preloaded ball nuts only).

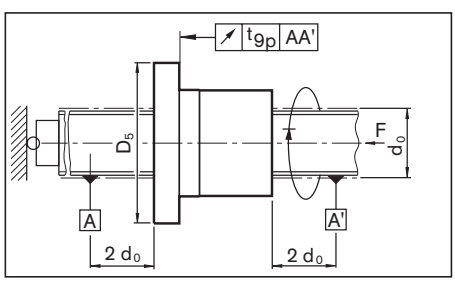

Flange diameter D_5 Over	Flange diameter D_5 Up to	t_{9p} in µm for tolerance grade 3	5	7	9
16	32	12	16	20	–
32	63	16	20	25	–
63	125	20	25	32	–
125	250	25	32	40	–

Radial run-out t_{10} of the outer diameter D_1 of the ball nut relative to **A** and **A'** (for preloaded and rotating ball nuts only). When measuring, fix the ball screw shaft to prevent rotation.

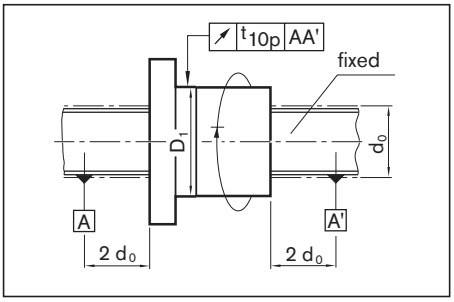

Outer diameter D_1		t_{10p} in µm for tolerance grade			
Over	Up to	3	5	7	9
16	**32**	12	16	20	–
32	**63**	16	20	25	–
63	**125**	20	25	32	–
125	**250**	25	32	40	–

Please contact us for the permissible axial and radial run-out with a driven nut

Limiting deviation ΔT_{pp} for the dynamic drag torque T_{p0} resulting from preloading (for preloaded ball nuts only)

Symbol definitions:

X = travel
Y = Dynamic drag torque with preload
1 = Dynamometer
T_p = F · l without wiper
T_t = F_t · l with wiper
l_n = Length of ball nut

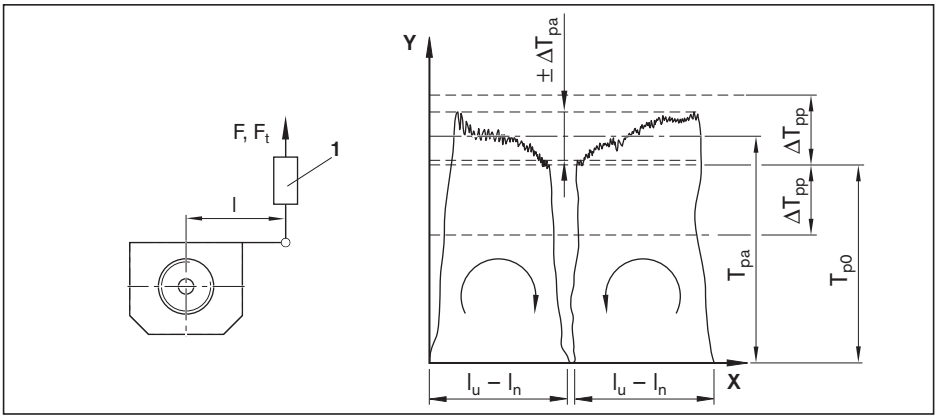

l_u / d_0 applies to	T_{p0} (Nm)		Tolerance grade							
			3	5	7	9	3	5	7	9
	>	≤	ΔT_{pp} (% of T_{p0}); $l_u \leq 4000$ mm				ΔT_{pp} (% of T_{p0}); $l_u > 4000$ mm			
≤ **40**	**0**	**0.4**	40	50	50	–	60	60	70	–
	0.4	**0.6**	35	40	40	–	50	50	60	–
	0.6	**1.0**	30	35	40	–	40	45	50	–
	1.0	**2.5**	25	30	35	–	35	40	45	–
	2.5	**6.3**	20	25	30	–	30	35	40	–
	6.3	**10.0**	15	20	30	–	25	30	35	–
	10.0		15	20	30	–	25	30	35	–
> **40**	**0**	**0.4**	50	60	60	–	60	60	70	–
	0.4	**0.6**	40	45	45	–	50	50	60	–
	0.6	**1.0**	35	40	45	–	40	45	50	–
	1.0	**2.5**	30	35	40	–	35	40	45	–
	2.5	**6.3**	25	30	35	–	30	35	40	–
	6.3	**10.0**	20	25	35	–	25	30	35	–
	10.0		20	25	35	–	25	30	35	–

Preload and rigidity

Nut system preload

In addition to single nuts with reduced backlash, Rexroth supplies preloaded or adjustable-preload nut systems.

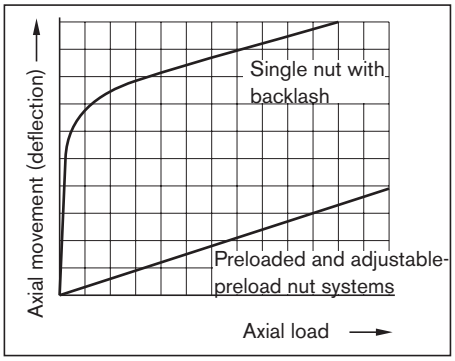

With the same preload, the rigidity behavior of these different Rexroth nut systems is virtually identical. The reason: Installation of adjustable-preload single nuts and preloaded single nuts is much more compact. The screw is typically far less rigid than the nut unit (for details see “Overall axial rigidity...”).

Preloaded single nut
Single nuts can be preloaded in an optimum way with preload classes C1, C2 or C3 by means of ball size selection.

Adjustable-preload single nut
Using adjustable-preload single nuts, the design process can be more favorably priced for many applications.
You set the zero backlash or the preloading radially by means of a slot that is approximately 0.1 mm wide; refer to the section entitled “Installation”.
Depending on the application, we preload the nut system with preload classes C1, C2 or C3. The maximum preload is preload class C3.

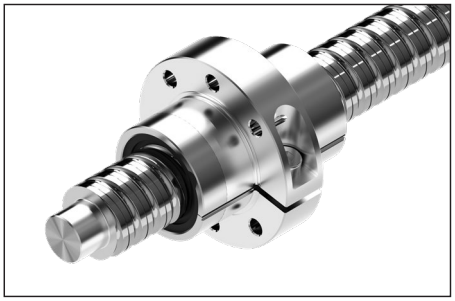

Single nut with flange FED
The HP series single nut with flange is preloaded in an optimum way with preload classes C1 or C2 by means of ball size selection.

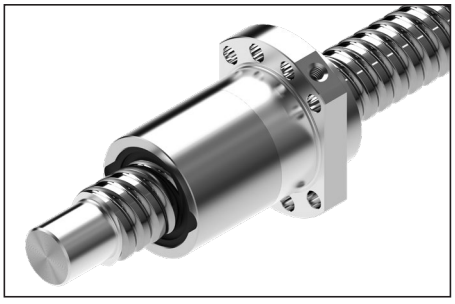

Double nut
Bracing two single nuts eliminates the axial play due to production-related issues and increases rigidity, which improves positioning accuracy.
To prevent the service life from being shortened, the preload should not amount to $^1/_3$ of the average operating load. Depending on the application, we preload the nut system with preload classes C4 or C5.

Driven nut FAR
You can preload Series HP driven nuts like a single nut using
preload classes C1, C2 or C3 by means of ball size selection.

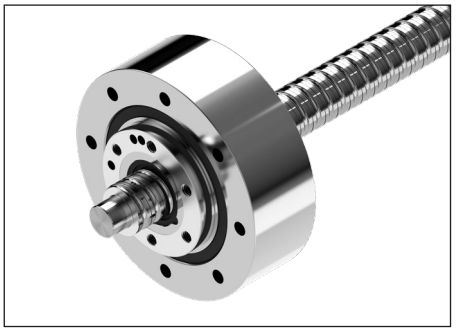

Rigidity

The rigidity of a ball screw assembly is also affected by all adjoining parts such as bearings, housing bores, nut housings, etc.

Overall axial rigidity R_{bs} of the ball screw assembly

The overall axial rigidity R_{bs} is made up of the component rigidity of the bearing R_{fb}, the screw R_S and the nut unit R_{nu}.

$$\frac{1}{R_{bs}} = \frac{1}{R_{fb}} + \frac{1}{R_S} + \frac{1}{R_{nu}} \quad (16)$$

Note:

Please note that in most cases the rigidity R_S of the screw will be significantly lower than the rigidity R_{nu} of the nut unit. With size 40 x 10, for example, the rigidity R_{nu} of the nut unit is two to three times greater than the rigidity R_S of a 500 mm-long screw.

Rigidity of the bearing R_{fb}

The rigidity of the bearings corresponds to the values in the bearing manufacturer's catalog.
See the dimension tables in this catalog for the rigidity values of the bearings that Rexroth can provide.

Rigidity in the area of the nut unit R_{nu}

The rigidity in the area of the preloaded nut unit is calculated on the basis of ISO 3408-4.
See the corresponding tables for rigidity values.

Rigidity of the screw R_S

The rigidity of the screw R_S depends on the type of bearing used.
See the corresponding tables for rigidity values.

1 Fixed bearing of the ball screw shaft on one end.

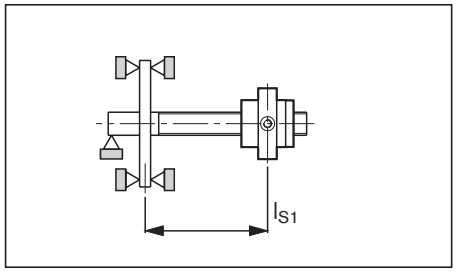

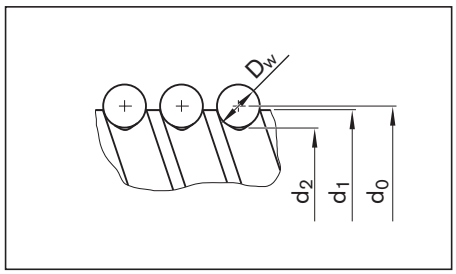

$$R_{S1} = 165 \cdot \frac{(d_0 - 0.71 \cdot D_w)^2}{l_{S1}} \quad (N/\mu m) \quad (17)$$

R_{S1}	=	rigidity of the screw	(N/µm)
d_0	=	nominal diameter	(mm)
D_w	=	ball diameter	(mm)
l_{S1}	=	Bearing - nut distance	(mm)

2 Fixed bearing of the ball screw shaft on both ends.

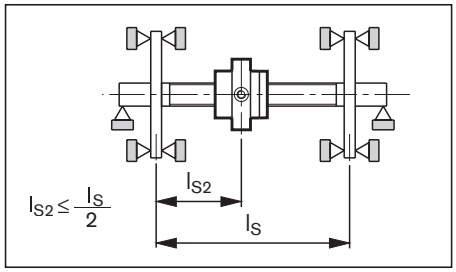

$$R_{S2} = 165 \cdot \frac{(d_0 - 0.71 \cdot D_w)^2}{l_{S2}} \cdot \frac{l_S}{l_S - l_{S2}} \quad (N/\mu m) \quad (18)$$

The lowest screw rigidity occurs at the center of the screw R_{S2min} ($l_{S2} = l_S/2$) and thus equals:

$$R_{S2min} = 660 \cdot \frac{(d_0 - 0.71 \cdot D_w)^2}{l_S} \quad (N/\mu m) \quad (19)$$

R_{S2}	=	rigidity of the screw	(N/µm)
d_0	=	nominal diameter	(mm)
D_w	=	ball diameter	(mm)
l_S	=	distance between bearing and bearing	(mm)
l_{S2}	=	distance between bearing and nut	(mm)

Preload and rigidity of single nuts

Dynamic drag torque, preload, and rigidity for screws of tolerance grades 3, 5, 7 with single nuts ZEV-E-S, FEP-E-S (C1 only), FEM-E-S, FEM-E-B, SEM-E-S and SEM-E-C (pay attention to the centering diameter D_1 that is to be set) ZEM-E-S, ZEM-E-K, ZEM-E-A, FED-E-B, FAR-B-S

T_0 = overall dynamic drag torque
T_0 = $T_{p0} + T_{RD}$
C = dynamic axial load capacity
C_0 = static load rating
F_{PR} = pre-tensioning force
T_{RD} = dynamic drag torque of the 2 seals
R_S = rigidity of the screw
R_{nu} = rigidity of the nut
T_{p0} = dynamic drag torque without seals
d_0 = nominal diameter
P = lead
D_w = ball diameter
i = Number of load-bearing gears

The values given for dynamic drag torque are proven practical indicators for the nut preloading.

Note:
To measure the dynamic drag torque, see the “Installation” section page 147.

Size	Load ratings		Backlash of single nut		Rigidity of the screw
	dyn. C	stat. C_0	Standard (C0)	Reduced (C00)	R_S
d_0 x P x D_w - i	(N)	(N)	(mm)	(mm)	$\left(\frac{N \cdot m}{\mu m}\right)$
6 x 1R x 0.8 - 3	1 080	1 030	0.01	0.005	5
6 x 2R x 0.8 - 3	1 070	1 020	0.01	0.005	5
8 x 1R x 0.8 - 4	1 310	1 850	0.01	0.005	9
8 x 2R x 1.2 - 4	2 360	2 950	0.01	0.005	9
8 x 2.5R x 1.588 - 3	2 640	2 800	0.02	0.010	8
8 x 2.5R x 1.588 - 4	3 490	3 910	0.02	0.010	8
8 x 5R x 1.588 - 3	2 500	2 650	0.02	0.010	8
12 x 2R x 1.2 - 4	2 690	4 160	0.01	0.005	21
12 x 5R x 2 - 3	4 560	5 800	0.02	0.010	18
12 x 10R x 2 - 2	3 000	3 600	0.02	0.010	18
16 x 5R x 3 - 3	11 300	11 800	0.04	0.020	32
16 x 5R/L x 3 - 4	14 800	16 100	0.04	0.020	32
16 x 10R x 3 - 3	11 500	12 300	0.04	0.020	32
16 x 16R x 3 - 2	7 560	7 600	0.04	0.020	32
16 x 16R x 3 - 3	11 200	12 000	0.04	0.020	32
16 x 16R x 3 - 6	17 800	24 200	0.04	0.020	32
20 x 5R/L x 3 - 4	17 200	21 500	0.04	0.020	53
20 x 5R x 3 - 5	21 000	27 300	0.04	0.020	53
20 x 10R x 3 - 4	16 900	21 300	0.04	0.020	53
20 x 20R x 3.5 - 2	10 900	12 100	0.04	0.020	52
20 x 20R x 3.5 - 3	16 000	18 800	0.04	0.020	52
20 x 20R x 3.5 - 6	25 700	38 100	0.04	0.020	52
20 x 40R x 3.5 - 4	14 000	26 200	0.04	0.020	52
25 x 5R/L x 3 - 4	19 100	27 200	0.04	0.020	86
25 x 5R x 3 - 7	31 400	48 700	0.04	0.020	86
25 x 10R x 3 - 4	18 800	27 000	0.04	0.020	86
25 x 10R x 3 - 5	23 200	34 200	0.04	0.020	86
25 x 25R 3.5 - 2	12 100	15 100	0.04	0.020	84
25 x 25R x 3.5 - 3	17 600	23 300	0.04	0.020	84
25 x 25R x 3.5 - 4.8	19 700	39 400	0.04	0.020	84
25 x 25R x 3.5 - 6	28 500	47 100	0.04	0.020	84
32 x 5R/L x 3.5 - 4	25 900	40 000	0.04	0.020	144
32 x 5R x 3.5 - 5	31 700	50 600	0.04	0.020	144
32 x 10R x 3.969 - 5	38 000	58 300	0.04	0.020	141
32 x 20R x 3.969 - 2	16 200	21 800	0.04	0.020	141
32 x 20R x 3.969 - 3	23 600	33 700	0.04	0.020	141
32 x 20R x 3.969 - 6	38 300	67 300	0.04	0.020	141
32 x 32R x 3.969 - 2	16 100	22 000	0.04	0.020	141
32 x 32R x 3.969 - 3	23 400	34 000	0.04	0.020	141
32 x 32R x 3.969 - 4.8	26 300	57 600	0.04	0.020	141
32 x 32R x 3.969 - 6	37 900	68 000	0.04	0.020	141
32 x 64R x 3.969 - 4	21 100	49 000	0.04	0.020	141
40 x 5R/L x 3.5 - 5	34 900	64 100	0.04	0.020	232
40 x 10R/L x 6 - 4	60 000	86 400	0.07	0.035	211
40 x 10R x 6 - 5	73 400	109 300	0.07	0.035	211
40 x 10R x 6 - 6	86 500	132 200	0.07	0.035	211
40 x 12R x 6 - 4	59 900	86 200	0.07	0.035	211
40 x 16R x 6 - 4	59 600	85 900	0.07	0.035	211
40 x 20R x 6 - 3	45 500	62 800	0.07	0.035	211
40 x 20R x 6 - 8	95 500	171 100	0.07	0.035	211
40 x 25R x 6 - 4	56 900	85 800	0.07	0.035	211
40 x 25R x 6 - 8	91 400	171 700	0.07	0.035	211
40 x 30R x 6 - 4	56 300	85 100	0.07	0.035	211
40 x 30R x 6 - 8	90 400	170 300	0.07	0.035	211
40 x 40R x 6 - 2	30 600	40 300	0.07	0.035	211
40 x 40R x 6 - 3	44 400	62 300	0.07	0.035	211
40 x 40R x 6 - 6	71 500	124 500	0.07	0.035	211
50 x 5R x 3.5 - 5	38 400	81 300	0.04	0.020	373
50 x 10R x 6 - 6	95 600	166 500	0.07	0.035	345
50 x 12R x 6 - 6	95 500	166 400	0.07	0.035	345
50 x 16R x 6 - 6	95 300	166 000	0.07	0.035	345
50 x 20R x 6.5 - 3	57 500	87 900	0.07	0.035	340
50 x 20R x 6.5 - 5	90 800	149 700	0.07	0.035	340
50 x 20R x 6.5 - 8	116 500	240 000	0.07	0.035	340
50 x 25R x 6.5 - 4	56 900	85 800	0.07	0.035	211
50 x 25R x 6.5 - 6	92 600	175 100	0.07	0.035	340
50 x 30R x 6.5 - 4	71 300	118 800	0.07	0.035	340
50 x 30R x 6.5 - 8	114 500	237 700	0.07	0.035	340
50 x 40R x 6.5 - 2	38 500	55 800	0.07	0.035	340
50 x 40R x 6.5 - 3	55 800	85 900	0.07	0.035	340
50 x 40R x 6.5 - 6	89 300	171 500	0.07	0.035	340

For sizes 63 and 80, see the next page.

Size	Rigidity and dynamic drag torque of the single nuts								
	with preload class C1			Preload class C2			Preload class C3		
	R_{nu} (N/µm)	F_{pr} (N)	T_{p0} (Nm)	R_{nu} (N/µm)	F_{pr} (N)	T_{p0} (Nm)	R_{nu} (N/µm)	F_{pr} (N)	T_{p0} (Nm)
d_0 x P x D_w - i			Tolerance grade 3; 5; 7			Tolerance grade 3; 5; 7			Tolerance grade 3; 5; 7
6 x 1R x 0.8 - 3	–	–	–	–	–	–	–	–	–
6 x 2R x 0.8 - 3	–	–	–	–	–	–	–	–	–
8 x 1R x 0.8 - 4	–	–	–	–	–	–	–	–	–
8 x 2R x 1.2 - 4	–	–	–	–	–	–	–	–	–
8 x 2.5R x 1.588 - 3	70	44	0.004	–	–	–	–	–	–
8 x 2.5R x 1.588 - 4	90	58	0.005	–	–	–	–	–	–
8 x 5R x 1.588 - 3	70	42	0.003	–	–	–	–	–	–
12 x 2R x 1.2 - 4	–	–	–	–	–	–	–	–	–
12 x 5R x 2 - 3	100	76	0.009	–	–	–	–	–	–
12 x 10R x 2 - 2	60	50	0.006	–	–	–	–	–	–
16 x 5R x 3 - 3	160	190	0.030	–	–	–	–	–	–
16 x 5R/L x 3 - 4	210	250	0.040	240	370	0.060	290	620	0.100
16 x 10R x 3 - 3	160	190	0.030	190	290	0.050	220	480	0.080
16 x 16R x 3 - 2	100	130	0.020	120	190	0.030	140	320	0.050
16 x 16R x 3 - 3	160	190	0.030	180	280	0.050	210	470	0.070
16 x 16R x 3 - 6	250	280	0.050	290	430	0.070	–	–	–
20 x 5R/L x 3 - 4	270	290	0.060	310	430	0.090	360	720	0.140
20 x 5R x 3 - 5	340	350	0.070	390	530	0.110	450	880	0.180
20 x 10R x 3 - 4	270	280	0.060	300	420	0.090	360	710	0.140
20 x 20R x 3.5 - 2	130	180	0.040	150	270	0.060	180	460	0.090
20 x 20R x 3.5 - 3	200	270	0.050	230	400	0.080	280	670	0.130
20 x 20R x 3.5 - 6	330	410	0.080	380	620	0.130	–	–	–
20 x 40R x 3.5 - 4	230	280	0.060	–	–	–	–	–	–
25 x 5R/L x 3 - 4	320	320	0.080	360	480	0.120	430	800	0.200
25 x 5R x 3 - 7	560	520	0.130	–	–	–	–	–	–
25 x 10R x 3 - 4	320	310	0.080	370	470	0.120	430	790	0.200
25 x 10R x 3 - 5	400	390	0.100	–	–	–	–	–	–
25 x 25R 3.5 - 2	160	200	0.050	180	300	0.080	220	510	0.130
25 x 25R x 3.5 - 3	240	290	0.070	270	440	0.110	320	740	0.180
25 x 25R x 3.5 - 4.8	370	390	0.100	–	–	–	–	–	–
25 x 25R x 3.5 - 6	400	440	0.110	450	680	0.170	–	–	–
32 x 5R/L x 3.5 - 4	390	430	0.140	440	650	0.210	520	1 080	0.350
32 x 5R x 3.5 - 5	490	530	0.170	–	790	–	–	–	–
32 x 10R x 3.969 - 5	510	630	0.200	580	950	0.300	690	1 590	0.510
32 x 20R x 3.969 - 2	200	270	0.090	230	410	0.130	270	680	0.220
32 x 20R x 3.969 - 3	300	390	0.130	350	590	0.190	410	990	0.320
32 x 20R x 3.969 - 6	500	610	0.200	570	920	0.290	–	–	–
32 x 32R x 3.969 - 2	200	270	0.090	220	400	0.130	270	670	0.210
32 x 32R x 3.969 - 3	300	390	0.120	340	590	0.190	400	980	0.310
32 x 32R x 3.969 - 4.8	470	530	0.170	–	–	–	–	–	–
32 x 32R x 3.969 - 6	490	610	0.190	560	910	0.290	–	–	–
32 x 64R x 3.969 - 4	350	420	0.140	–	–	–	–	–	–
40 x 5R/L x 3.5 - 5	580	580	0.230	660	870	0.350	770	1 460	0.580
40 x 10R/L x 6 - 4	510	1 000	0.400	580	1 500	0.600	690	2 500	1.000
40 x 10R x 6 - 5	650	1 230	0.490	740	1 850	0.730	870	3 080	1.220
40 x 10R x 6 - 6	770	1 440	0.580	880	2 160	0.870	1 030	3 610	1.440
40 x 12R x 6 - 4	510	1 000	0.400	590	1 500	0.600	690	2 500	1.000
40 x 16R x 6 - 4	510	990	0.400	590	1 490	0.600	690	2 490	0.990
40 x 20R x 6 - 3	380	760	0.300	440	1 140	0.460	510	1 900	0.760
40 x 20R x 6 - 8	850	1 530	0.610	960	2 290	0.920	–	–	–
40 x 25R x 6 - 4	500	950	0.380	570	1 420	0.568	680	2 350	0.940
40 x 25R x 6 - 8	830	1 460	0.584	940	2 190	0.876	–	–	–
40 x 30R x 6 - 4	490	940	0.376	570	1 410	0.564	670	2 350	0.940
40 x 30R x 6 - 8	810	1 450	0.580	930	2 170	0.868	–	–	–
40 x 40R x 6 - 2	240	510	0.200	280	770	0.310	330	1 280	0.510
40 x 40R x 6 - 3	370	740	0.300	420	1 110	0.440	500	1 850	0.740
40 x 40R x 6 - 6	600	1 140	0.460	690	1 720	0.690	–	–	–
50 x 5R x 3.5 - 5	690	640	0.320	780	960	0.480	910	1 600	0.800
50 x 10R x 6 - 6	910	1 590	0.800	1 040	2 390	1.200	1 220	3 990	1.990
50 x 12R x 6 - 6	920	1 590	0.800	1 050	2 390	1.190	1 230	3 980	1.990
50 x 16R x 6 - 6	920	1 590	0.790	1 050	2 380	1.190	1 240	3 970	1.990
50 x 20R x 6.5 - 3	480	960	0.480	540	1 440	0.720	640	2 400	1.200
50 x 20R x 6.5 - 5	790	1 510	0.760	900	2 270	1.140	1 060	3 790	1.890
50 x 20R x 6.5 - 8	1 030	1 860	0.930	1 180	2 800	1.400	–	–	–
50 x 25R x 6.5 - 4	620	1 200	0.600	710	1 790	0.90	840	2 990	1.500
50 x 25R x 6.5 - 6	780	1 480	0.740	890	2 220	1.110	–	–	–
50 x 30R x 6.5 - 4	620	1 190	0.595	700	1 780	0.890	830	2 970	1.485
50 x 30R x 6.5 - 8	1 020	1 830	0.915	1 160	2 750	1.375	–	–	–
50 x 40R x 6.5 - 2	300	640	0.320	350	960	0.480	410	1 610	0.800
50 x 40R x 6.5 - 3	460	930	0.470	520	1 400	0.700	620	2 330	1.160
50 x 40R x 6.5 - 6	750	1 430	0.710	860	2 140	1.070	–	–	–

For sizes 63 and 80, see the next page.

Preload and rigidity of single nuts

Size	Load ratings		Backlash of single nut		Rigidity of the screw
	dyn. C	stat. C_0	Standard (C0)	Reduced (C00)	R_S
d_0 x P x D_w - i	(N)	(N)	(mm)	(mm)	$\left(\frac{N \cdot m}{\mu m}\right)$
63 x 10R x 6 - 6	106,600	214,300	0.07	0.035	569
63 x 20R x 6.5 - 3	63,800	112,100	0.07	0.035	563
63 x 20R x 6.5 - 5	100,700	190,300	0.07	0.035	563
63 x 20R x 6.5 - 8	130,800	292,000	0.07	0.035	563
63 x 40R x 6.5 - 2	44,300	74,300	0.07	0.035	563
63 x 40R x 6.5 - 3	64,100	114,100	0.07	0.035	563
63 x 40R x 6.5 - 6	100,000	230,600	0.07	0.035	563
80 x 10R x 6.5 - 6	130,100	291,700	0.07	0.035	938
80 x 20R x 12.7 - 6	315,200	534,200	0.11	0.055	832
80 x 40R x 12.7 - 4	216,600	367,600	0.11	0.055	832

Preload and rigidity of double nuts

Dynamic drag torque, preload, and rigidity for screws of tolerance grades 3, 5, 7 with double nuts
FDM-E-S, FDM-E-B

T_0 = overall dynamic drag torque
T_0 = $T_{p0} + T_{RD}$
C = dynamic axial load capacity
C_0 = static load rating
T_{RD} = dynamic drag torque of the 2 seals
R_S = rigidity of the screw
R_{nu} = rigidity of the nut
T_{p0} = dynamic drag torque without seals
d_0 = nominal diameter
P = lead
D_w = ball diameter
i = number of ball track turns

The values given for dynamic drag torque are proven practical indicators for the nut preloading.

Note:
To measure the dynamic drag torque, see the “Installation” section page 147.

Size	Load ratings		Rigidity of the screw
	dyn. C	stat. C_0	R_S
d_0 x P x D_w - i	(N)	(N)	$\left(\frac{N \cdot m}{\mu m}\right)$
16 x 5R x 3 - 4	14,800	16,100	32
20 x 5R x 3 - 4	17,200	21,500	53
25 x 5R x 3 - 4	19,100	27,200	86
25 x 10R x 3 - 4	18,800	27,000	86
32 x 5R x 3.5 - 4	25,900	40,000	144
32 x 10R x 3.969 - 5	38,000	58,300	141
40 x 5R x 3.5 - 5	34,900	64,100	232
40 x 10R x 6 - 4	60,000	86,400	211
40 x 10R x 6 - 6	86,500	132,200	211
40 x 20R x 6 - 3	45,500	62,800	211
50 x 5R x 3.5 - 5	38,400	81,300	373
50 x 10R x 6 - 4	66,500	109,000	345
50 x 10R x 6 - 6	95,600	166,500	345
50 x 20R x 6.5 - 5	90,800	149,700	340
63 x 10R x 6 - 4	74,200	140,500	569
63 x 10R x 6 - 6	106,600	214,300	569
63 x 20R x 6.5 - 5	100,700	190,300	563
80 x 10R x 6.5 - 6	130,100	291,700	938
80 x 20R x 12.7 - 6	315,200	534,200	832

Size	Rigidity and dynamic drag torque of the single nuts								
	with preload class C1			Preload class C2			Preload class C3		
	R_{nu} (N/µm)	F_{pr} (N)	T_{p0} (Nm)	R_{nu} (N/µm)	F_{pr} (N)	T_{p0} (Nm)	R_{nu} (N/µm)	F_{pr} (N)	T_{p0} (Nm)
d_0 x P x D_w - i			Tolerance grade 3; 5; 7			Tolerance grade 3; 5; 7			Tolerance grade 3; 5; 7
63 x 10R x 6 - 6	1,100	1,780	1.120	1,250	2,660	1.68	1,460	4,440	2.800
63 x 20R x 6.5 - 3	570	1,060	0.670	650	1,600	1.01	770	2,660	1.680
63 x 20R x 6.5 - 5	950	1,680	1.060	1,080	2,520	1.59	1,280	4,200	2.640
63 x 20R x 6.5 - 8	1,250	2,090	1.320	1,430	3,140	1.98	–	–	–
63 x 40R x 6.5 - 2	390	740	0.460	440	1,110	0.70	520	1,850	1.160
63 x 40R x 6.5 - 3	580	1,070	0.670	660	1,600	1.01	780	2,670	1.680
63 x 40R x 6.5 - 6	950	1,600	1.010	1,080	2,400	1.51	–	–	–
80 x 10R x 6.5 - 6	1,290	2,170	1.730	1,460	3,250	2.60	1,700	5,420	4.340
80 x 20R x 12.7 - 6	1,430	5,250	4.200	1,620	7,880	6.31	1,910	13,100	10.510
80 x 40R x 12.7 - 4	980	3,610	2.888	1,120	5,420	4.336	1,320	9,030	7.224

Size	Rigidity and dynamic drag torque of the double nuts					
	with preload class C5			with preload class C4		
			Tolerance grade 3; 5; 7			Tolerance grade 3; 5; 7
d_0 x P x D_w - i	R_{nu} (N/µm)	F_{pr} (N)	T_{p0} (Nm)	R_{nu} (N/µm)	F_{pr} (N)	T_{p0} (Nm)
16 x 5R x 3 - 4	320	860	0.06	360	1,230	0.08
20 x 5R x 3 - 4	400	1,000	0.08	450	1,430	0.11
25 x 5R x 3 - 4	470	1,110	0.11	330	1,590	0.16
25 x 10R x 3 - 4	480	1,100	0.11	440	1,570	0.16
32 x 5R x 3.5 - 4	570	1,510	0.19	640	2,160	0.28
32 x 10R x 3.969 - 5	770	2,220	0.28	860	3,170	0.41
40 x 5R x 3.5 - 5	850	2,040	0.33	950	2,910	0.47
40 x 10R x 6 - 4	760	3,500	0.56	850	5,000	0.80
40 x 10R x 6 - 6	1,150	5,050	0.81	1,280	7,210	1.15
40 x 20R x 6 - 3	570	2,650	0.42	640	3,790	0.61
50 x 5R x 3.5 - 5	1,000	2,240	0.45	1,110	3,200	0.64
50 x 10R x 6 - 4	900	3,880	0.78	1,010	5,540	1.11
50 x 10R x 6 - 6	1,350	5,580	1.12	1,510	7,970	1.59
50 x 20R x 6.5 - 5	1,180	5,300	1.06	1,320	7,570	1.51
63 x 10R x 6 - 4	1,080	4,330	1.09	1,200	6,180	1.56
63 x 10R x 6 - 6	1,620	6,220	1.57	1,800	8,880	2.24
63 x 20R x 6.5 - 5	1,420	5,870	1.48	1,590	8,390	2.11
80 x 10R x 6.5 - 6	1,870	7,590	2.43	2,070	10,800	3.47
80 x 20R x 12.7 - 6	2,130	18,400	5.88	2,380	26,300	8.41

Frictional torques of the seals

Seal torque for single and double nuts

T_0 = overall dynamic drag torque
T_0 = $T_{p0} + T_{RD}$
T_{RD} = dynamic drag torque of the 2 seals
T_{p0} = dynamic drag torque without seals
d_0 = nominal diameter
P = lead
D_w = ball diameter

Note:
To measure the dynamic drag torque, see the “Installation” section page 147.

Size	Dynamic drag torque		
	Standard seal	reinforced seal	Low-friction seal
d_0 x P x D_w	T_{RD} approx. (Nm)	T_{RD} approx. (Nm)	T_{RD} = 0 Nm
6 x 1R x 0.8	–	–	✓
6 x 2R x 0.8	–	–	✓
8 x 1R x 0.8	–	–	✓
8 x 2R x 1.2	–	–	✓
8 x 2.5R x 1.588	0.015	–	✓
8 x 5R x 1.588	0.015	–	–
12 x 2R x 1.2	0.030	–	✓
12 x 5R x 2	0.030	–	✓
12 x 10R x 2	0.030	–	✓
16 x 5R x 3	0.080	–	✓
16 x 5L x 3	0.080	–	✓
16 x 10R x 3	0.080	–	✓
16 x 16R x 3	0.080	–	✓
20 x 5R x 3	0.100	–	✓
20 x 5L x 3	0.100	–	–
20 x 10R x 3	0.120	–	–
20 x 20R x 3.5	0.120	–	✓
20 x 40R x 3.5	0.040	–	✓
25 x 5R x 3	0.120	0.34	✓
25 x 5L x 3	0.120	–	–
25 x 10R x 3	0.150	0.29	✓
25 x 25R x 3.5	0.200	0.25	✓
32 x 5R x 3.5	0.250	0.51	✓
32 x 5L x 3.5	0.250	–	–
32 x 10R x 3.969	0.250	0.46	✓
32 x 20R x 3.969	0.250	0.49	✓
32 x 32R x 3.969	0.250	0.45	✓
32 x 64R x 3.969	0.250	0.45	✓
40 x 5R x 3.5	0.400	0.85	✓
40 x 5L x 3.5	0.400	–	–
40 x 10R x 6	0.400	0.91	✓
40 x 10L x 6	0.400	–	–
40 x 12R x 6	0.400	–	–
40 x 16R x 6	0.400	–	–
40 x 20R x 6	0.400	0.54	✓
40 x 25R x 6	0.400	0.54	–
40 x 30R x 6	0.400	0.54	–
40 x 40R x 6	0.400	0.54	✓
50 x 5R x 3.5	0.500	–	–
50 x 10R x 6	0.600	0.95	–
50 x 12R x 6	0.600	–	–
50 x 16R x 6	0.600	–	–
50 x 20R x 6.5	0.600	0.95	–
50 x 25R x 6.5	0.700	–	–
50 x 30R x 6.5	0.700	0.95	–
50 x 40R x 6.5	0.700	–	–
63 x 10R x 6	1.200	–	–
63 x 20R x 6.5	1.200	1.40	–
63 x 40R x 6.5	1.200	1.40	–
80 x 10R x 6.5	1.400	–	–
80 x 20R x 12.7	2.200	–	–
80 x 40R x 12.7	2.300	–	–

When retrofitting and changing over the seals, please note:

All precision screws with small leads are single-start
(Figure 1). There is thus no ball raceway on the screw.
Precision screws with higher leads, however, are 2-start or 4-start
(Figs. 2 and 3).

“Reinforced seals” for precision screws are optionally available. This version can be identified by the opal-green coloring of the component and the material number.

Low-friction seals for precision screws are available on request. This version can be identified by the red-brown coloring of the component and the material number.

	Standard nuts	FED nut
Fig. 1 Single-start seal	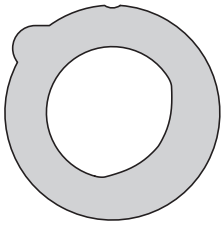	
Fig. 2 Seal for the 2-start precision screw with medium lead	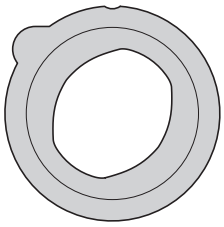	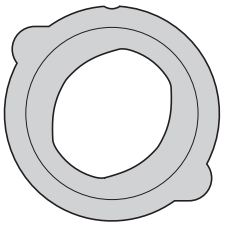
Fig. 3 Seal for the 4-start precision screw with high lead	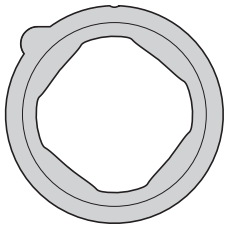	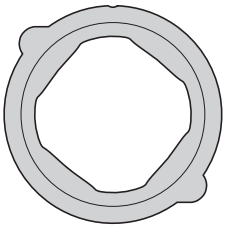

Installing the seal

Position the nut on the screw according to the Figure. Lay the wiper seal with the nose in the recess and press until it snaps into the groove. When turning the nut on the screw, monitor the sealing lip and align it by pressing on the end face if need be. Please make sure that the sealing lip does not get damaged.
Detailed assembly instructions are included with the delivery.

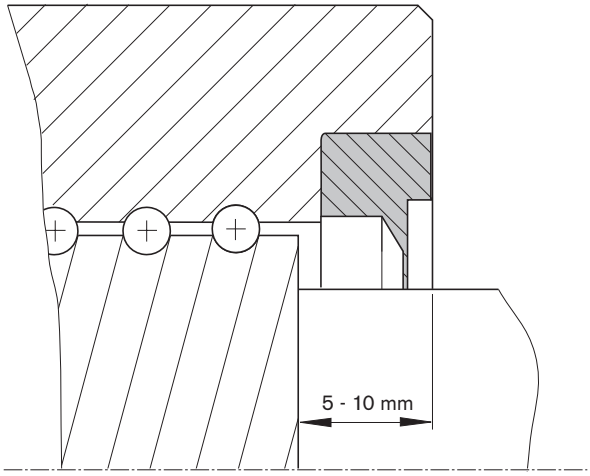

Installation

Delivery condition

Normally, Rexroth ball screws are supplied initially greased with Dynalub grease. This makes possible relubrication using oil or grease. and cartridges and cans of this grease are available. If another lubricant is used, you will need to check that it is compatible with the initial lubrication grease. In special cases, a ball screw assembly with only a preservative coating can be ordered and supplied using the appropriate ordering code.

⚠ Note

The selected lubricant must be in the nut before the machine is started.

Cleaning

Various cleaning agents can be used to degrease and wash the assembly:
- aqueous cleaning agents
- organic cleaning agents

⚠ Note

Immediately after cleaning, thoroughly dry all parts and apply a preservative coating or anti-corrosion oil.
In all cases, take care to observe the appropriate legal regulations (environmental protection, health and safety at work, etc.) as well as the specifications for the cleaning agent (e.g. handling).

Storage

Ball screw assemblies are high-quality systems that must be treated with due care. In order to prevent damage and contamination, the elements should not be removed from the protective wrapping until immediately before installation. Once they have been removed from the packaging, they must be set down on V-shaped cradles.

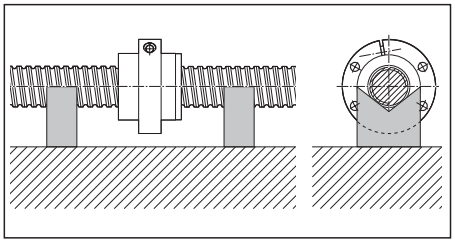

Nut mounting

Preloaded single nut double nut
These versions are always supplied on the ready-mounted nut unit on the screw.
You must not disassemble the nut unit and the screw. If this is unavoidable, please contact us.

Note: In the case of ball screw assemblies with a front lube unit, do not rotate the nut and the front lube unit from the screw.

Single nut with standard backlash
Single nut with reduced backlash
Adjustable-preload single nut

You must only mount the nut unit on an end-machined screw using a mounting arbor. The screw journal is then used to center the mounting arbor. In the case of screw ends of Form “00”, you can use a centering bore “Z” on the end face to place an auxiliary spigot in position for mounting. The external diameter of the arbor should be approximately 0.1 mm less than the root diameter of the screw. In most cases, you can use the supplied arbor with nut units. The start of the screw’s thread must be rounded off carefully to avoid damage to the seal and the individual inner parts of the nut unit.

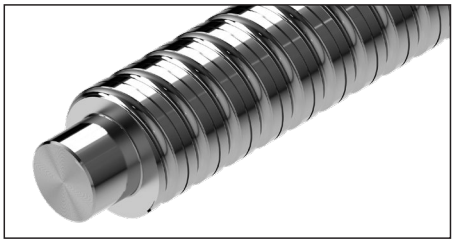

The individual mounting steps are described below.
Disassembly is carried out in the reverse order. Be particularly careful; otherwise, the nut or its individual internal parts could be damaged, which would lead to premature failure of the ball screw assembly.

Individual mounting steps

Carry out installation as follows:
Remove the retaining ring (➠ mounting instructions) on one side of the mounting arbor.

Push the mounting arbor with the nut to the start of the thread.
The arbor must be in contact on an axially backlash-free basis.
Now, carefully turn the nut unit onto the thread with slight axial pressure.

Do not remove the mounting arbor until the nut unit is located completely on the screw thread.

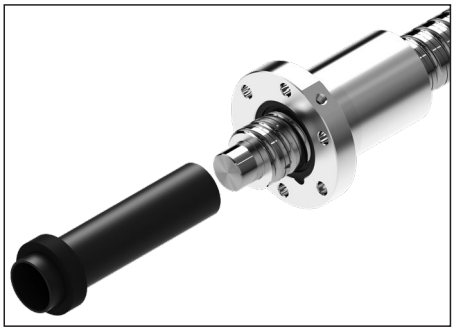

Preloading of the adjustable-preload single nut

Measuring of the dynamic drag torque with SEM-E-S and SEM-E-C.
Use an adjusting screw to restrict the clearance of the nut that is ready-mounted on the screw such that the dynamic drag torque $\mathbf{T_{p0}}$ achieves the value in the table ➠ page 140 (with the ball screw assembly lightly oiled).
You must carry out the inspection across the entire length of the thread; if the values are different from the ones in the table, correct the setting.
After you make the setting, the centering diameter $\mathbf{D_1}$ must match the values in the tables ➠ page 38 and 40. Cover the head of the screw with a protective cap.

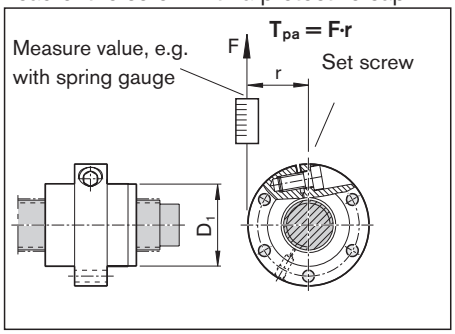

T_{pa} = currently measured dynamic drag torque

Assembly instructions are included with each delivery. If you need additional copies, please ask us.

Installation in the machine

It is not normally necessary to remove the preservative coating before installation.

- If the ball screw assembly is contaminated, you must clean it first (see “Cleaning”) and re-oil it
- Push the nut unit into the mounting bore, taking care to avoid any impact force or misalignment.
- Tighten the mounting screws using a torque wrench if necessary. Maximum tightening torque for the steel/steel material pairing ($R_m \geq 370$ N/mm²), see table.

Steel/steel material pairing			
Screw diameter (mm)	**Tightening torque** (Nm) **Strength classes as per DIN ISO 898**		
	8.8	**10.9**	**12.9**
M3	1.3	1.8	2.1
M4	2.7	3.8	4.6
M5	5.5	8.0	9.5
M6	9.5	13.0	16.0
M8	23.0	32.0	39.0
M10	46.0	64.0	77.0
M12	80.0	110.0	135.0
M14	125.0	180.0	215.0
M16	195.0	275.0	330.0
M18	280.0	400.0	470.0
M20	390.0	560.0	650.0

- The maximum tightening torques specified in the table below apply to the steel/aluminum or aluminum/aluminum material pairings ($R_m \geq 280$ N/mm²).
  When driving screws into aluminum, the length of thread engagement should be at least 1.5 times the screw diameter.

Mounting screws

⚠ Always make sure the screws are secure where there are high screw loads!

Steel/aluminum and aluminum/aluminum material pairings			
Screw diameter (mm)	**Tightening torque** (Nm) **Strength classes as per DIN ISO 898**		
	8.8	**10.9**	**12.9**
M3	1.2	1.2	1.2
M4	2.4	2.4	2.4
M5	4.8	4.8	4.8
M6	8.5	8.5	8.5
M8	20.0	20.0	20.0
M10	41.0	41.0	41.0
M12	70.0	70.0	70.0
M14	110.0	110.0	110.0
M16	175.0	175.0	175.0
M18	250.0	250.0	250.0
M20	345.0	345.0	345.0

Tightening torques for fastening screws according to VDI 2230 where $\mu_G = \mu_K = 0.125$

Aligning the ball screw assembly in the machine

A gauge[1)] with a self-aligning contact pad is available from Rexroth for easy alignment of the ball screw assembly.

Two pads of different lengths are available which can be used depending on the screw lead:

- Part number R3305 131 19
  length 33 mm for leads < 20
- Part number R3305 131 21
  length 50 mm for leads > 20

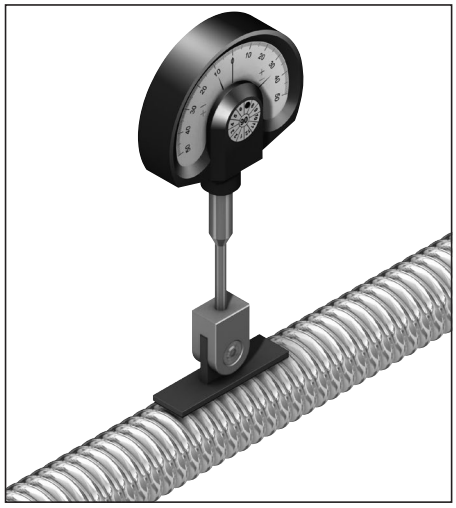

1) The dial gauge is not supplied

Installation tolerances

⚠ Note

Any alignment errors can lead to premature failure of the ball screw assembly, which means that they are not allowed!

To ensure that a BASA can actually achieve the calculated service life and performance, its system-related requirements and limitations must be taken into account at the design stage. Screw assemblies are not suitable for transferring radial forces and torques, such as may be caused by misalignments during installation. The following sections illustrate the most important principles for achieving designs that will be compatible with the screw drive system and its requirements.

When using BASAs, the specified installation tolerances must be observed when designing and building the adjoining structures. The first basic principle is: The higher the BASA's precision and preload, the more accurate the adjoining structures must be.
This applies in particular to applications in which the nut travels close up to the end bearings since, in this area, the risk of distortive stresses and therefore of additional loads is very high.

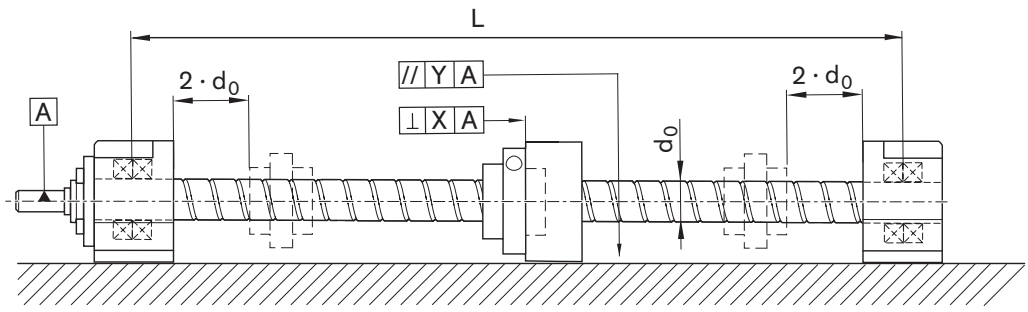

Parallelism offset and details of the rectangularity between the screw shaft axis and the location face of the nut housing.

L	=	distance between end bearings	(mm)
d_0	=	nominal diameter of screw	(mm)
X	=	permissible deviation from rectangularity: The tolerance applies to a surface that must lie between two planes spaced at a distance X from each other which are perpendicular to the reference axis A.	(mm)
Y	=	Permissible parallelism offset between the guide and the ball screw assembly	(mm)

The adjacent table shows the most important recommended tolerances for ball screw assemblies as a function of the preload.
These tolerances include the rectangularity of the nut housing (or adjoining structure) relative to the screw axis. The tolerances for parallelism between the guide and the ball screw assembly must also be complied with.
Minimum distance of the nut from the end bearings > 2 • d_0
Any alignment errors can lead to premature breakdown of the ball screw assembly!

Preload option	X (mm)	Y (mm)
Backlash	0.04	0.04
Preloaded	0.02	0.02

Lubrication

General lubrication instructions

- All informations on lubrication is based on test values and field experience and are recommendations from Bosch Rexroth.

⚠ Do not use greases containing solid particles (e.g. graphite or MoS_2)!

⚠ If other lubricants are used, this may lead to a reduction in the relubrication intervals, the achievable travel in short-stroke applications, and the load capacities. Possible chemical interactions between the plastic materials, lubricants and preservative oils must also be taken into account.

⚠ If your application makes greater environmental demands (i.e. cleanroom, vacuum, foodstuff application, strong or aggressive metal-working fluids, or extreme temperatures) please contact us, since a special test, and possibly a special lubricant, will be required. Please have all information about your application to hand.

⚠ When using in other sectors, e.g.: food industry, clean room, vacuum etc. or at extreme temperatures, or if the lubrication is exposed to process media, the standard initial lubrication and anti-corrosion agents used prior to shipment may not be suitable, or they may be incompatible with the relubrication lubricant. In this case, please consult us in advance!

⚠ Even under normal operating conditions, the system must be relubricated at the latest after 2 years due to aging of the grease. Please note the reduced load ratings according to the technical notes.

- In general, you should not apply the lubricant all in one go; rather, apply several smaller amounts.

- In the case of a short stroke, (stroke ≤ nut length, L), it is advisable to carry out a lubricating stroke more often. In this case, there is a risk, amongst other things, that low-viscosity lubricants drop out. Please note the information about reducing the load rating in "Technical notes" on page 133. Please consult our regional centers regarding short stroke applications.You can find your local contact person at: www.boschrexroth.com/contact

Grease lubrication **With a grease gun or a progressive lubrication system in the case of ball screw assemblies > Ø 12 mm**

Lubricating grease

We recommend using **Dynalub 510** with the following properties:

- NLGI grade 2 lithium-based high-performance grease as per DIN 51818 (KP2K-20 according to DIN 51825)
- Good water resistance
- Corrosion protection
- Temperature range: −20 to +80 °C

Under conventional environmental conditions, this ground-fiber, homogeneous grease is ideally suited for the lubrication of linear elements:

- For loads of up to 50% C
- For short-stroke applications ≥ 1 mm
- For the permissible speed range of ball screw assemblies

You can download product and safety data sheets from our website at: www.boschrexroth.de.

Please also observe the information on page 168.

Material numbers for Dynalub 510:
- R3416 037 00 (cartridge 400 g)
- R3416 035 00 (hobbock 25 kg)

Initial lubrication of the ball screw assemblies (basic lubrication)

Fully assembled BASAs with a diameter greater than 12 mm are prelubricated at the factory with Dynalub 510.
When individual parts are supplied (nut on mounting arbor) or with versions without basic lubrication at the factory, you must apply double the quantity of lubricant stated in the “Lubricant quantities - Relubrication” table via the nut’s lube hole before commissioning.

The positioning and traversing instructions (see figure below) must be complied with.

When using progressive lubrication systems, ensure that all the lines and distributors (including the connection to the BASA nut unit) are filled before carrying out basic lubrication or relubrication.

Relubricating the ball screw assemblies

If the relubrication interval according to the diagram on page 152 has been reached, relubricate the amount stated in Table “Amount of lubricant for relubrication” on page 154.

In this connection, you must comply with the nut position and traversing path shown in the “Positioning and traversing instructions” illustration.

Positioning and traversing instructions

Horizontal mounting position

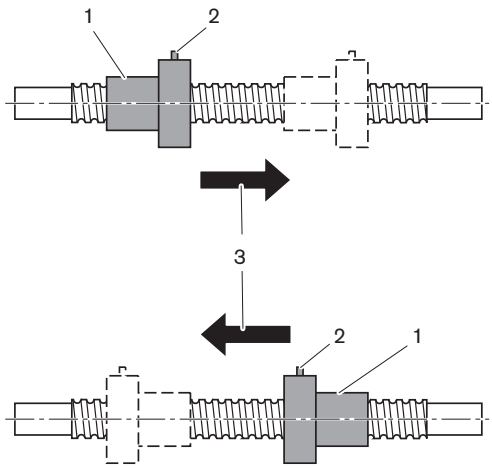

Vertical mounting position

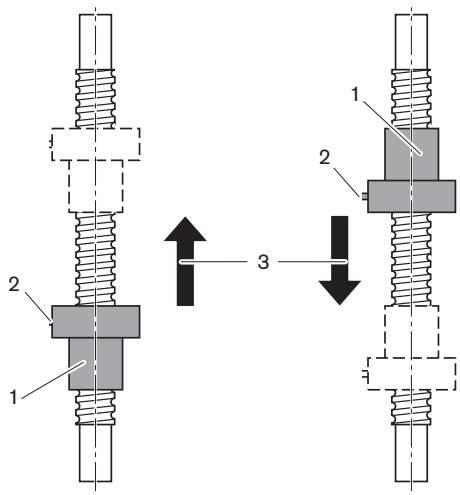

1 Position of the nut during lubrication
2 Flange with lube port (if installed horizontally, the port should be at the top if possible)
3 Direction of travel after lubrication. Traversing path should be at least 3x the nut length.

Load-dependent re-greasing intervals in the case of grease lubrication with a grease gun or a progressive lubrication system in the case of ball screw assemblies > Ø 12 mm ("dry axes")

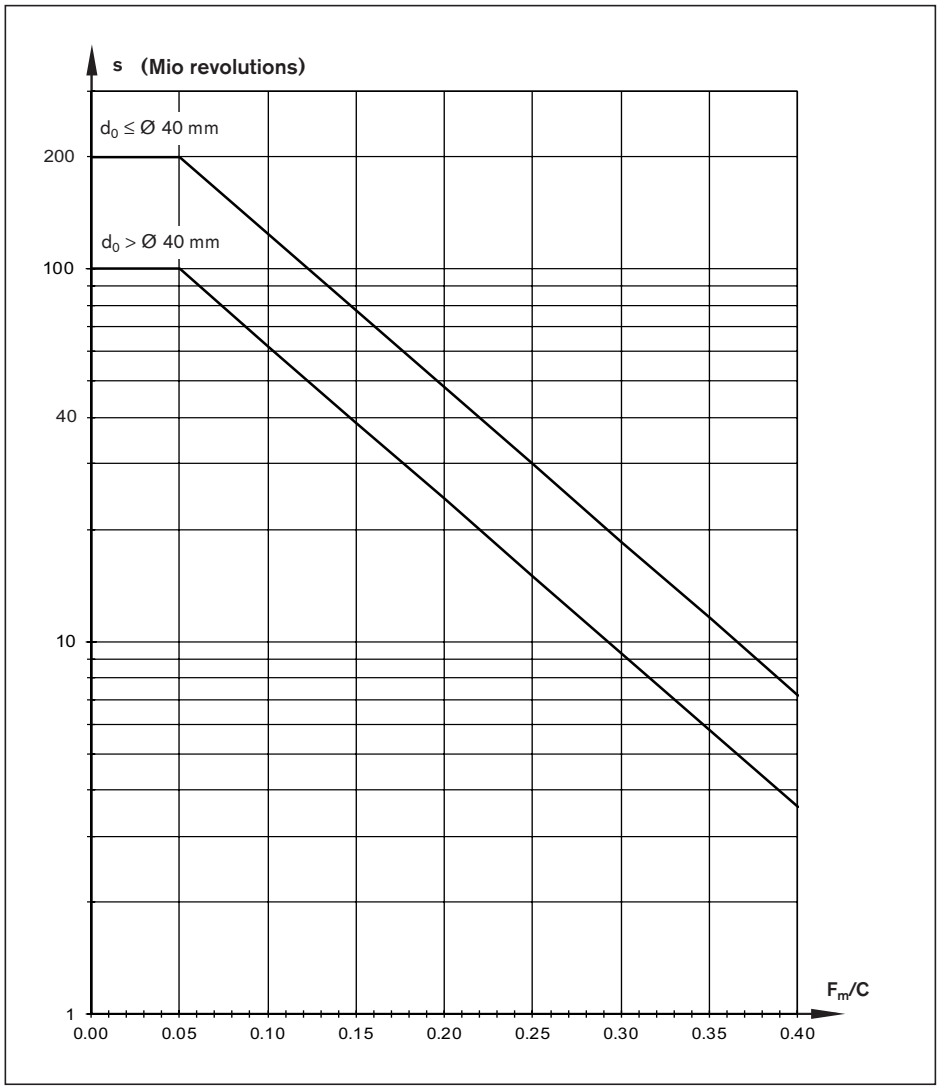

This applies to the following conditions:

- Dynalub 510 grease or, alternatively, Castrol Longtime PD 2, Elkalub GLS 135/N2 grease
- No exposure to media
- Standard seals
- Driven screws
- Not mission critical operation
- Ambient temperature: T = 10 to 40 °C

s = relubrication interval in millions of revolutions (10^6 revolutions)
C = dynamic load rating (N)
F_m = equivalent dynamic axial load (N)
d_0 = nominal diameter (mm)

Conversion of the relubrication interval s from millions of revolutions to kilometers:

$$\text{s in kilometers} = \frac{\text{s in millions (of revs)} \cdot \text{lead P (mm)}}{10^6}$$

Example:

$$\text{s in kilometers} = \frac{200 \cdot 10^6 \text{ (revs)} \cdot 16 \text{ (mm)}}{10^6} = 3200 \text{ km}$$

Notes

The load ratio F_m/C is the quotient of the equivalent dynamic axial load F_m and the dynamic load rating C (see “Calculation”).

At extreme operating conditions, please consult us as special consideration may be required for the lubrication intervals.

These operating conditions include low medium rotary speeds nm, increased ambient temperatures and high loads $F_m/C > 0.4$.

If you are using a progressive lubrication system, please take into account the minimum metering quantity of 0.03 cm^3.

Please also note the general lubrication information on page 149.

Grease lubrication With a grease gun or a progressive lubrication system in the case of ball screw assemblies > Ø 12 mm

Amount of lubricant for relubrication

Size	Amount of lubricant for relubrication (cm³)		
d_0 x P x D_w - i	FED-E-B / FEM-E-B / FEM-E-S / FEP-E-S SEM-E-C / SEM-E-S / ZEM-E-S / ZEM-E-K / ZEM-E-A	ZEV-E-S	FDM-E-B / FDM-E-S
16x5Rx3 - 3	–	0.9	–
16x5R/Lx3 - 4	0.70	–	1.75
16x10Rx3 - 3	0.85	1.10	–
16x16Rx3 - 2	0.95	–	–
16x16Rx3 - 3	1.20	–	–
16x16Rx3 - 6	1.35	–	–
20x5R/Lx3 - 4	1.00	1.30	2.95
20x5Rx3 - 5	1.15	–	–
20x10Rx3 - 4	1.50	–	–
20x20Rx3.5 - 2	1.85	–	–
20x20Rx3.5 - 3	2.40	–	–
20x20Rx3.5 - 6	2.50	–	–
20x40Rx3.5 - 4	1.75	–	–
25x5R/Lx3 - 4	1.50	–	3.50
25x5Rx3 - 7	–	1.95	–
25x10Rx3 - 4	1.85	–	4.15
25x10Rx3 - 5	–	2.05	–
25x25Rx3.5 - 2	2.65	–	–
25x25Rx3.5 - 3	3.45	–	–
25x25Rx3.5 - 4.8	1.65	–	–
25x25Rx3.5 - 6	3.90	–	–
32x5Lx3.5 - 4	2.50	–	–
32x5Rx3.5 - 4	2.15	–	4.90
32x5Rx3.5 - 5	–	2.40	–
32x10Rx3.969 - 5	3.05	3.25	6.65
32x20Rx3.969 - 2	2.80	–	–
32x20Rx3.969 - 3	3.55	–	–
32x20Rx3.969 - 6	3.70	–	–
32x32Rx3.969 - 2	4.05	–	–
32x32Rx3.969 - 3	5.45	–	–
32x32Rx3.969 - 4.8	2.85	–	–
32x32Rx3.969 - 6	6.20	–	–
32x64Rx3.969 - 4	3.35	–	–
40x5Lx3.5 - 5	3.35	–	–
40x5Rx3.5 - 5	2.95	–	7.60
40x10Lx6 - 4	6.50	–	–
40x10Rx6 - 4	6.65	–	16.75
40x10Rx6 - 5	7.70	–	–
40x10Rx6 - 6	8.15	–	19.70
40x12Rx6 - 4	6.75	–	–
40x16Rx6 - 4	9.15	–	21.35
40x20Rx6 - 3	8.70	–	20.55
40x20Rx6 - 8	9.35	–	–
40x25Rx6 - 4	10.84	–	–
40x25Rx6 - 8	10.99	–	
40x30Rx6 - 4	11.95	–	–
40x30Rx6 - 8	12.29	–	
40x40Rx6 - 2	10.40	–	–
40x40Rx6 - 3	14.30	–	–

Size d_0 x P x D_w - i	Amount of lubricant for relubrication (cm³) FED-E-B / FEM-E-B / FEM-E-S / FEP-E-S SEM-E-C / SEM-E-S / ZEM-E-S / ZEM-E-K / ZEM-E-A	ZEV-E-S	FDM-E-B / FDM-E-S
40x40Rx6 - 6	15.00	–	–
50x5Rx3.5 - 5	4.65	–	11.70
50x10Rx6 - 4	–	–	21.90
50x10Rx6 - 6	10.75	–	25.55
50x12Rx6 - 6	11.60	–	–
50x16Rx6 - 6	16.15	–	–
50x20Rx6.5 - 3	12.65	–	–
50x20Rx6.5 - 5	17.35	–	34.75
50x20Rx6.5 - 8	9.90	–	–
50x25Rx6.5 - 4	14.20	–	–
50x25Rx6.5 - 6	10.45	–	–
50x30Rx6.5 - 4	14.73	–	–
50x30Rx6.5 - 8	14.81	–	
50x40Rx6.5 - 2	15.45	–	–
50x40Rx6.5 - 3	20.65	–	–
50x40Rx6.5 - 6	19.15	–	–
63x10Rx6 - 4	–	–	25.55
63x10Rx6 - 6	12.15	–	30.00
63x20Rx6.5 - 3	15.45	–	–
63x20Rx6.5 - 5	21.35	–	43.75
63x20Rx6.5 - 8	14.35	–	–
63x40Rx6.5 - 2	18.90	–	–
63x40Rx6.5 - 3	25.40	–	–
63x40Rx6.5 - 6	26.95	–	–
80x10Rx6.5 - 6	19.10	–	66.00
80x20Rx12.7 - 6	65.50	–	132.75
80x40Rx12.7 - 4	72.84	–	–

Note: The sizes that are listed in the table are not available for all nut types.
You can find the respective size range in the chapter entitled “Nuts” from page 24 onward.

Relubrication for driven nut FAR

For NLGI grade 2 greases (using grease gun)

The driven nut can be supplied with grease via the outer race of the angular-contact thrust ball bearing. It must simply be noted that the nut must be stationary during the lubricating procedure. The nut can however be in any position on the screw.
This provides a very simple solution to the problem of a rotating lube port on the nut unit itself. Two lube ports (M6) with radial or axial access are provided. On delivery, both are sealed by setscrews. The lube port can be opened by removing the set screw.

For FAR with or without timing belt side drive the following applies:
- Can be relubricated with NLGI Class 2 grease when stationary via the stationary lube port of the bearing outer race
- screw liquid-cooled on request
- optional lubrication via screw

FAR size	BASA size d_0 x P x D_w - i	Relubrication quantity (cm³)
32	**32 x 10R x 3.969 - 5**	3.5
	32 x 20R x 3.969 - 3	4.0
	32 x 32R x 3.969 - 3	6.0
40	**40 x 10R x 6 - 5**	8.4
	40 x 20R x 6 - 3	9.8
	40 x 40R x 6 - 3	16.1
50	**50 x 10R x 6 - 6**	12.2
	50 x 20R x 6.5 - 5	19.5
	50 x 40R x 6.5 - 3	23.3
63	**63 x 10R x 6 - 6**	13.8
	63 x 20R x 6.5 - 5	24.0
	63 x 40R x 6.5 - 3	28.7

Liquid grease lubrication with a single-line piston distributor system and Liquid grease lubrication with ball screw assemblies ≤ Ø 12 mm

Lubricating grease

We recommend using **Dynalub 520** with the following properties:
- Lithium-based, high-performance grease of NLGI grade 00 according to DIN 51818 (GP00K-20 according to DIN 51826)
- Good water resistance
- Corrosion protection
- Temperature range: -20 to +80 °C

Under conventional environmental conditions, this ground-fiber, homogeneous grease is ideally suited for the lubrication of linear elements:
- In single-line one-point lubrication systems
- For loads of up to 50% C
- For short-stroke applications ≥ 1 mm
- For the permissible speed range of ball screw assemblies
- With miniature versions

You can download product and safety data sheets from our website at: www.boschrexroth.de.
Please also observe the information on page 168

Material numbers for Dynalub 520:
- R3416 043 00 (cartridge 400 g)
- R3416 042 00 (bucket 5 kg)
- R0419 090 01 (5 ml maintenance kit)

Initial lubrication of the ball screw assemblies (basic lubrication)

Fully assembled BASAs with a diameter less than or equal to 12 mm are prelubricated at the factory with Dynalub 520.

When individual parts are supplied (nut on mounting arbor) or with versions without basic lubrication at the factory, you must apply double the quantity of lubricant stated in table “Amount of lubricant for relubrication” on page 160 via the nut’s lube hole before commissioning.

The positioning and traversing instructions in the illustration below must be complied with.

When using single-line distributor systems, care should be taken that all lines and the piston distributors (including the connection to the BASA nut) are filled before performing basic lubrication or relubrication. In the case of ball screw assemblies ≤ Ø 12 mm, it is advisable to use the maintenance set.

Relubricating the ball screw assemblies

Apply the relubrication quantity according to Table “Amount of lubricant for relubrication” on page 160 to the lube port until the specified relubrication interval shown in the diagram on page 158 has been reached.

The pulse count that is needed for this is the integer quotient of the relubrication amount according to table “Amount of lubricant for relubrication” on page 160 and the piston distributor size.

In this connection, you must ensure that the smallest piston distributor size of 0.03 cm^3 is not fallen short of.

The lubricant cycle time can then be obtained by dividing the relubrication interval by the calculated pulse count.
In this connection, you must comply with the nut position and traversing path shown in the “Positioning and traversing instructions” illustration.

Positioning and traversing instructions

Horizontal mounting position

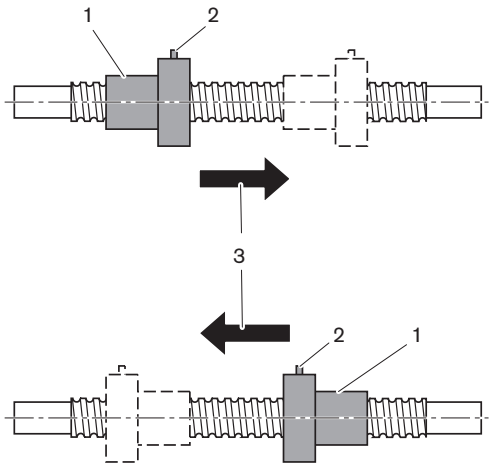

Vertical mounting position

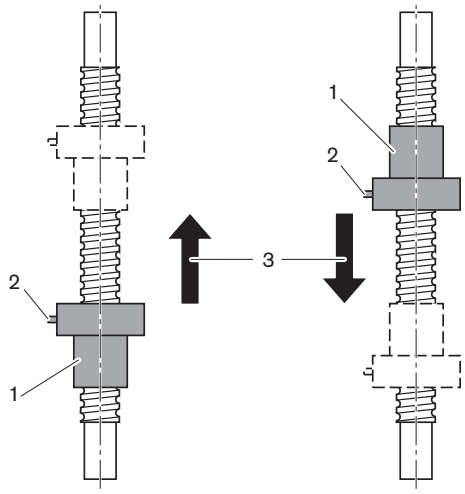

1 Position of the nut during lubrication
2 Flange with lube port (if installed horizontally, the port should be at the top if possible)
3 Direction of travel after lubrication. Traversing path should be at least 3x the nut length.

Load-dependent re-greasing intervals in the case of a single-line piston distributor system and liquid grease lubrication with ball screw assemblies ≤ Ø 12 mm (“dry axes”)

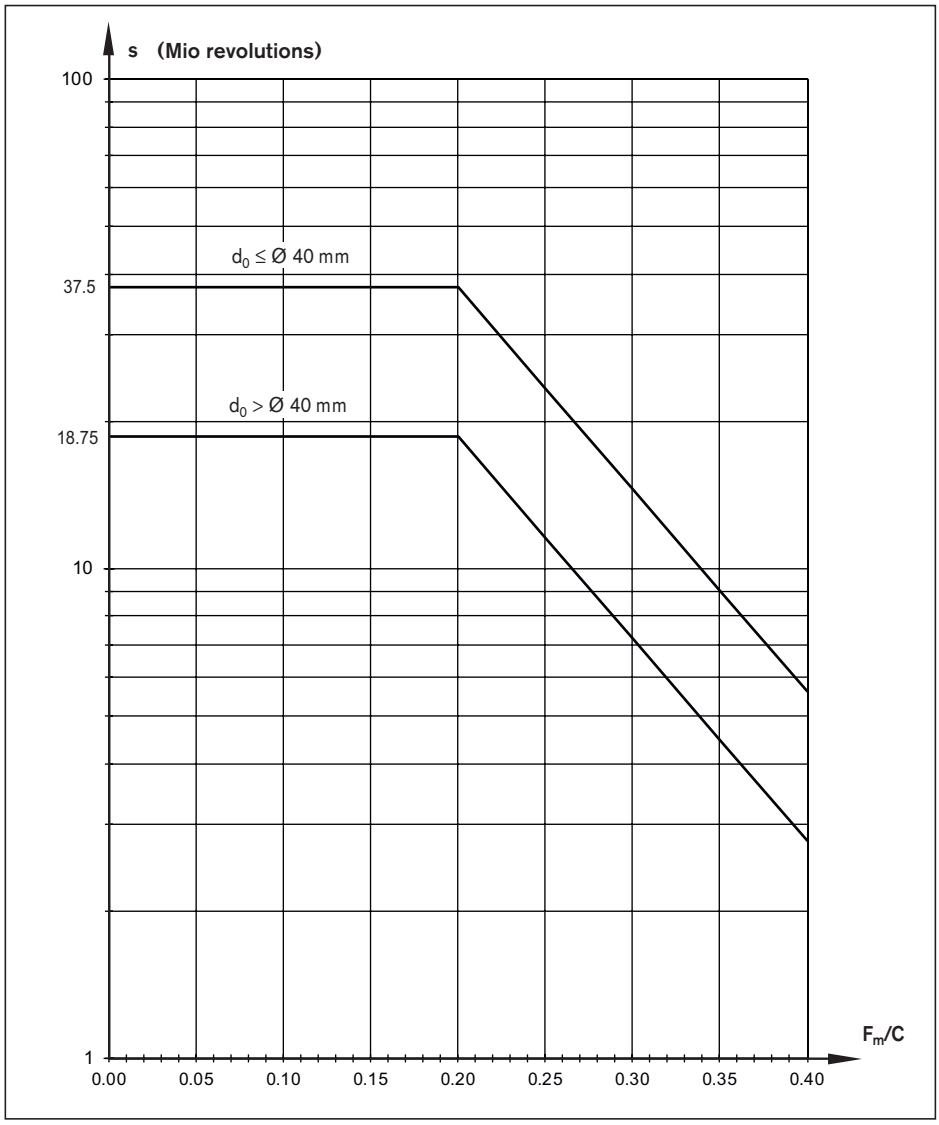

This applies to the following conditions:

- Dynalub 520 grease or, alternatively, Castrol Longtime PD 00, Elkalub GLS 135/N00 grease
- No exposure to media
- Standard seals
- Driven screws
- Not mission critical operation
- Ambient temperature: T = 10 to 40 °C

s = relubrication interval in millions of revolutions (10^6 revolutions)
C = dynamic load rating (N)
F_m = equivalent dynamic axial load (N)
d_0 = nominal diameter (mm)

Conversion of the relubrication interval s from millions of revolutions to kilometers:

$$\text{s in kilometers} = \frac{\text{s in millions (of revs)} \cdot \text{lead P (mm)}}{10^6}$$

Example:

$$\text{s in kilometers} = \frac{37{,}5 \cdot 10^6 \text{ (revs)} \cdot 16 \text{ (mm)}}{10^6} = 600 \text{ km}$$

Notes

The load ratio F_m/C is the quotient of the equivalent dynamic axial load F_m and the dynamic load rating C (see “Calculation”).

At extreme operating conditions, please consult us as special consideration may be required for the lubrication intervals.

These operating conditions include low medium rotary speeds nm, increased ambient temperatures and high loads $F_m/C > 0.4$.

When using a single-line distributor system, you must ensure that the smallest piston distributor size of 0.03 cm^3 is not fallen short of.

We recommend using piston distributors from SKF. They should be installed as close as possible to the lube ports of the ball screw assembly nut.

Long lines and small line diameters should be avoided, and the lines should be laid on an upward slant.
If other consumers are connected to the single-line centralized lubrication system, the weakest link in the chain determines the lubrication cycle time.

Pumping or storage tanks for the lubricant should be fitted either with a stirrer or a follower piston to guarantee the flow of lubricant (to avoid funneling in the tank).

Please also note the general lubrication information on page 149.

Liquid grease lubrication with a single-line piston distributor system and Liquid grease lubrication with ball screw assemblies ≤ Ø 12 mm

Amount of lubricant for relubrication

Size	Amount of lubricant for relubrication (cm³)		
	FED-E-B / FEM-E-B / FEM-E-S / FEP-E-S	ZEV-E-S	FDM-E-B / FDM-E-S
d_0 x P x D_w - i	SEM-E-C / SEM-E-S / ZEM-E-S / ZEM-E-K / ZEM-E-A		
6x1Rx0.8-3	0.05	–	–
6x2Rx0.8-3	0.05	–	–
8x1Rx0.8-4	0.06	–	–
8x2Rx1.2-4	0.07	–	–
8x2.5Rx1.588-3	0.11	–	–
8x2.5Rx1.588-4	–	0.14	–
8x5Rx1.588-3	0.12	–	–
12x2Rx1.2-4	0.17	–	–
12x5Rx2-3	0.33	0.33	–
12x10Rx2-2	0.33	0.33	–
16x5Rx3-3	–	0.90	–
16x5R/Lx3-4	0.70	–	1.75
16x10Rx3-3	0.85	1.10	–
16x16Rx3-2	0.95	–	–
16x16Rx3-3	1.20	–	–
16x16Rx3-6	1.35	–	–
20x5R/Lx3-4	1.00	1.30	2.95
20x5Rx3-5	1.15	–	–
20x10Rx3-4	1.50	–	–
20x20Rx3.5-2	1.85	–	–
20x20Rx3.5-3	2.40	–	–
20x20Rx3.5-6	2.50	–	–
20x40Rx3.5-4	1.75	–	–
25x5R/Lx3-4	1.50	–	3.50
25x5Rx3-7	–	1.95	–
25x10Rx3-4	1.85	–	4.15
25x10Rx3-5	–	2.05	–
25x25Rx3.5-2	2.65	–	–
25x25Rx3.5-3	3.45	–	–
25x25Rx3.5-4.8	1.65	–	–
25x25Rx3.5-6	3.90	–	–
32x5Lx3.5-4	2.50	–	–
32x5Rx3.5-4	2.15	–	4.90
32x5Rx3.5-5	–	2.40	–
32x10Rx3.969-5	3.05	3.25	6.65
32x20Rx3.969-2	2.80	–	–
32x20Rx3.969-3	3.55	–	–
32x20Rx3.969-6	3.70	–	–
32x32Rx3.969-2	4.05	–	–
32x32Rx3.969-3	5.45	–	–
32x32Rx3.969-4.8	2.85	–	–
32x32Rx3.969-6	6.20	–	–
32x64Rx3.969-4	3.35	–	–
40x5Lx3.5-5	3.35	–	–
40x5Rx3.5-5	2.95	–	7.60
40x10Lx6-4	6.50	–	–
40x10Rx6-4	6.65	–	16.75
40x10Rx6-5	7.70	–	–
40x10Rx6-6	8.15	–	19.70
40x12Rx6-4	6.75	–	–
40x16Rx6-4	9.15	–	21.35
40x20Rx6-3	8.70	–	20.55
40x20Rx6-8	9.35	–	–
40x25Rx6-4	10.85	–	–
40x25Rx6-8	11.00	–	–

Size	Amount of lubricant for relubrication (cm³)		
	FED-E-B / FEM-E-B / FEM-E-S / FEP-E-S	ZEV-E-S	FDM-E-B / FDM-E-S
d_0 x P x D_w - i	SEM-E-C / SEM-E-S / ZEM-E-S / ZEM-E-K / ZEM-E-A		
40x30Rx6-4	11.95	–	–
40x30Rx6-8	12.20	–	–
40x40Rx6-2	10.40	–	–
40x40Rx6-3	14.30	–	–
40x40Rx6-6	15.00	–	–
50x5Rx3.5-5	4.65	–	11.70
50x10Rx6-4	–	–	21.90
50x10Rx6-6	10.75	–	25.55
50x12Rx6-6	11.60	–	–
50x16Rx6-6	16.15	–	–
50x20Rx6.5-3	12.65	–	–
50x20Rx6.5-5	17.35	–	34.75
50x20Rx6.5-8	9.90	–	–
50x25Rx6.5-6	10.45	–	–
50x30Rx6.5-4	14.73	–	–
50x30Rx6.5-6	14.80	–	–
50x40Rx6.5-2	15.45	–	–
50x40Rx6.5-3	20.65	–	–
50x40Rx6.5-6	19.15	–	–
63x10Rx6-4	–	–	25.55
63x10Rx6-6	12.15	–	30.00
63x20Rx6.5-3	15.45	–	–
63x20Rx6.5-5	21.35	–	43.75
63x20Rx6.5-8	14.35	–	–
63x40Rx6.5-2	18.90	–	–
63x40Rx6.5-3	25.40	–	–
63x40Rx6.5-6	26.95	–	–
80x10Rx6.5-6	19.10	–	66.00
80x20Rx12.7-6	65.50	–	132.75
80x40Rx12.7-4	72.84	–	–

Note: The sizes that are listed in the table are not available for all nut types.
You can find the respective size range in the chapter entitled “Nuts” from page 24 onward.

Oil lubrication **with a single-line piston distributor system**

Oil lubricant
We recommend using **Shell Tonna S 220** with the following properties:

- Special demulsifying oil CLP or CGLP as per DIN 51517-3 for machine bed tracks and tool guides
- A blend of highly refined mineral oils and additives
- Can be used even when mixed with significant quantities of metalworking fluids

Initial lubrication of the ball screw assemblies (basic lubrication)

Fully assembled BASAs with a diameter less than or equal to 12 mm are prelubricated at the factory with Dynalub 520.

Fully assembled BASAs with a diameter greater than 12 mm are prelubricated at the factory with Dynalub 510.

When individual parts are supplied (nut on mounting arbor) or in the case of special designs without basic lubrication at the factory, you must apply double the quantity of lubricant stated in table “Amount of lubricant for oil lubrication” on page 162 via the nut’s lube hole before commissioning.
The positioning and traversing instructions in the illustration below must be complied with.

When using single-line distributor systems, care should be taken that all lines and the piston distributors (including the connection to the BASA nut) are filled before performing basic lubrication or relubrication.

Relubricating the ball screw assemblies

Apply the relubrication quantity according to Table “Amount of lubricant for oil lubrication” on page 162 to the lube port until the specified relubrication interval in the diagrams on page 164 has been reached.

The pulse count that is needed for this is the integer quotient of the relubrication amount according to table “Amount of lubricant for oil lubrication” on page 162 and the piston distributor size.

In this connection, you must ensure that the smallest piston distributor size of 0.03 cm^3 is not fallen short of.

The lubricant cycle time can then be obtained by dividing the relubrication interval by the calculated pulse count.
In this connection, you must comply with the nut position and traversing path shown in the “Positioning and traversing instructions” illustration.

Amount of lubricant for oil lubrication

Note:
In the case of double-threaded FED-E-B single flange nuts and oil lubrication, the quantities for initial and relubrication increase by 20%.

Nominal diameter d_0 (mm)	Initial lubrication V_e (cm^3)	Relubrication V_n (cm^3)
6 / 8 / 12 / 16	0.3	0.03
20 / 25 / 32	0.6	0.06
40	2.0	0.40
50 / 63	4.0	0.80
80	8.0	1.60

Positioning and traversing instructions

Horizontal mounting position

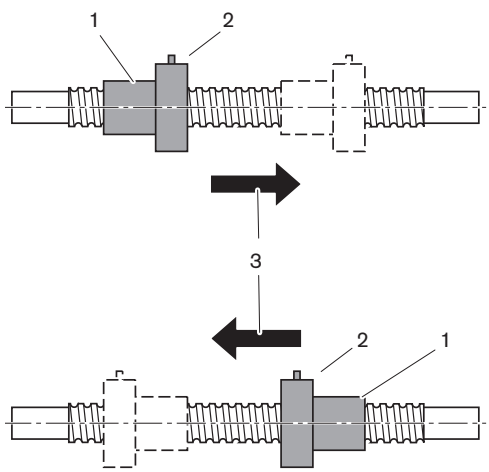

Vertical mounting position

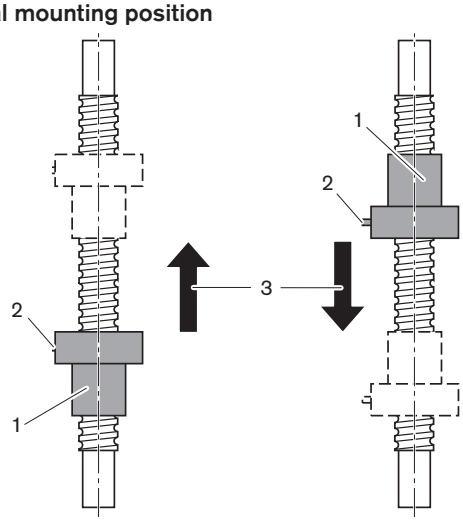

1 Position of the nut during lubrication
2 Flange with lube port (if installed horizontally, the port should be at the top if possible)
3 Direction of travel after lubrication. Traversing path should be at least 3x the nut length.

Load-dependent lubrication in the case of oil lubrication with single-line piston distributor systems (“dry axes”)

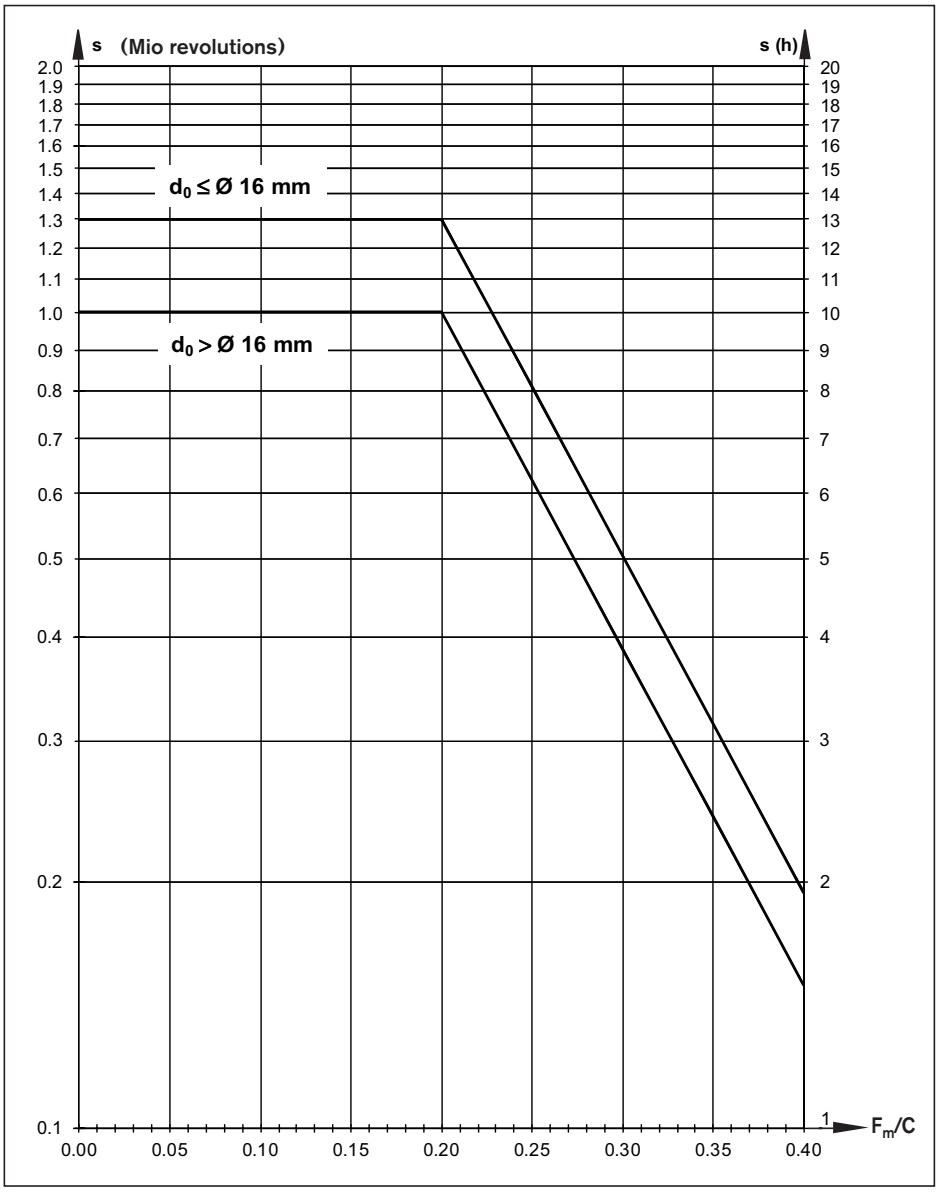

This applies to the following conditions:
- Lubricating oil is Shell Tonna S 220
- No exposure to media
- Standard seals
- Driven screws
- Not mission critical operation
- Ambient temperature: T = 10 to 40 °C

s = relubrication interval in millions of revolutions 10^6 rev.
or hours (h)
C = dynamic load rating (N)
F_m = equivalent dynamic axial load (N)

The relubrication interval **s** is defined either by the number of revolutions in millions or the operating time in **h**.
The value that is reached first defines the lubrication interval.

Conversion of the relubrication interval s from millions of revolutions to kilometers:

$$\text{s in kilometers} = \frac{\text{s in millions (of revs)} \cdot \text{lead P (mm)}}{10^6}$$

Example:

$$\text{s in kilometers} = \frac{1.3 \cdot 10^6 \text{ (revs)} \cdot 16 \text{ (mm)}}{10^6} = 20.8 \text{ km}$$

Notes

The load ratio F_m/C is the quotient of the equivalent dynamic axial load F_m and the dynamic load rating C (see “Calculation”).

At extreme operating conditions, please consult us as special consideration may be required for the lubrication intervals. These operating conditions include low medium rotary speeds nm, increased ambient temperatures and high loads $F_m/C > 0.4$.

When using a single-line distributor system, you must ensure that the smallest piston distributor size of 0.03 cm^3 is not fallen short of.

We recommend using piston distributors from SKF. They should be installed as close as possible to the lube ports of the ball screw assembly nut.

Long lines and small line diameters should be avoided, and the lines should be laid on an upward slant.

If other consumers are connected to the single-line centralized lubrication system, the weakest link in the chain determines the lubrication cycle time.

Please also note the general lubrication information on page 149.

Oil lubrication **with a single-line piston distributor system**

Design example of lubrication a typical two-axis application using central lubrication

X axis

Component or characteristic value	Specifications
Ball screw assembly	FEM-E-S 32x10Rx3.969-5; C = 38000 N; Part no.: R 1512 340 13 (page 34)
Equivalent dynamic axial load	F_m = 9 510 N
Stroke	1,000 mm
Average speed	n_m = 1,000 rpm
Ambient temperature	10 to 40 °C
Mounting orientation	Horizontal
Lubrication	Single-line distributor system for all axes with Shell Tonna S 220 oil
Exposure	No exposure to media, chips, dust

Design sizes	Design	Sources of information
1. Normal stroke or short stroke	Normal stroke: Stroke > nut length L; 1,000 mm > 77 mm! i.e. normal stroke applies!	For short stroke information, see page 133, for L see page 34
2. Initial lubrication amount	Initial lubrication amount: At the factory with Dynalub 510	See basic lubrication on page page 162
3. Relubrication amount	Relubrication amount: 0.06 cm^3	Relubrication amount from table page 154
4. Mounting orientation	Pay attention to the positioning and traversing instructions for the horizontal mounting orientation!	see “Positioning and traversing instructions” on page 163
5. Piston distributor size	Permitted piston distributor size: 0.03 cm^3	see page 163
6. Number of pulses	Number of pulses $= \frac{0.06\ cm^3}{0.03\ cm^3} = 2$	Number of pulses $= \frac{\text{Relubrication amount}}{\text{Permissible piston distributor size}}$
7. Load ratio	Load ratio $= \frac{9{,}510\ N}{38{,}000\ N} = 0.25$	Load ratio $= \frac{F_m}{C}$ F_m and C from specifications
8. Relubrication interval	Relubrication interval: $0.63 \cdot 10^6$ revs or every 6.3 h	From diagram on page 164 with a load ratio of 0.25
9. Effective relubrication interval	Since at n_m = 1,000 rpm the $0.63 \cdot 10^6$ revs is only reached after 10.5 h, the read-off 6.3 h is effective as the lubrication interval.	n_m from specifications is the effective relubrication interval, see the “Note” on page 162
10. Lube cycle	Lube cycle $= \frac{6.3\ h}{2} = 3.15\ h$	Lube cycle $= \frac{\text{Eff. Relubrication interval}}{\text{Number of pulses}}$

Interim result (X-axis) In the case of the X-axis, the system must supply the nut of the ball screw assembly with a minimum amount of 0.03 cm^3 of Shell Tonna S 220 every two hours.

Y axis

Component or characteristic value	Specifications
Ball screw assembly	FEM-E-B 16x16Rx3-3; C = 11,200 N; Part no.: R 1502 060 63 (page 36)
Equivalent dynamic axial load	F_m = 1,200 N
Stroke	500 mm
Average speed	n_m = 1,500 rpm
Ambient temperature	10 to 40 °C
Mounting orientation	Horizontal
Lubrication	Single-line distributor system for all axes with Shell Tonna S 220 oil
Exposure	No exposure to media, chips, dust

Design sizes	Design	Sources of information
1. Normal stroke or short stroke?	Normal stroke: Stroke > nut length L; 500 mm > 61 mm! i.e. normal stroke applies!	For short stroke information, see page 133, for L see page 36
2. Initial lubrication amount	Initial lubrication amount: At the factory with Dynalub 510	See basic lubrication on page page 162
3. Relubrication amount	Relubrication amount: 0.03 cm^3	Relubrication amount from table page 162
4. Mounting orientation	Pay attention to the positioning and traversing instructions for the horizontal mounting orientation!	see “Positioning and traversing instructions” on page 163
5. Piston distributor size	Permitted piston distributor size: 0.03 cm^3	see page 163
6. Number of pulses	Number of pulses $= \frac{0.03\ cm^3}{0.03\ cm^3} = 1$	Number of pulses $= \frac{\text{Relubrication amount}}{\text{Permissible piston distributor size}}$
7. Load ratio	Load ratio $= \frac{1{,}200\ N}{11{,}200\ N} = 0.11$	Load ratio $= \frac{F_m}{C}$ F_m and C from specifications
8. Relubrication interval	Relubrication interval: $1.3 \cdot 10^6$ revs or every 13 h	From diagram on page 164 with a load ratio of 0.11
9. Effective relubrication interval	Since at n_m = 1,500 rpm the $1.3 \cdot 10^6$ revs is only reached after 14.4 h, the read-off 13 h is effective as the lubrication interval.	n_m from specifications is the effective relubrication interval, see the “Note” on page page 162
10. Lube cycle	Lube cycle $= \frac{13\ h}{1} = 13\ h$	Lube cycle $= \frac{\text{Eff. relubrication interval}}{\text{Number of pulses}}$

Interim result (Y-axis)

In the case of the Y-axis, the system must supply the nut of the ball screw assembly with a minimum amount of 0.03 cm^3 of Shell Tonna S 220 every 13 hours.

Final result (Two-axis lubrication)

Since the axes in this example are both to be supplied by a single-line distributor system, the X-axis – with its lower (two-hour) lubrication cycle – determines the overall lubrication cycle of the system, i.e. the Y-axis is lubricated every 3.15 hours too.

Lubricants

Dynalub high-performance lubricant for linear motion technology

(Approved in the countries of the EU only; not approved outside of the EU)

Product description of Dynalub 510

Part number	Packaging unit
R3416 037 00	1 x 400 g
R3416 035 00	Hobbock 25 kg

Dynalub 510 is a lithium-based high-performance grease of NLGI grade 2 that has been specially designed for linear motion technology applications. It is characterized by its good water resistance and corrosion protection properties and can be used at temperatures ranging from –20 °C to +80 °C.

Application area

Under conventional environmental conditions, this ground-fiber, homogeneous grease is ideally suited for the lubrication of linear elements:

- At loads of up to 0.5 C_{dyn}
- Also with short-stroke applications ≥ 1 (mm)

Technical data

For additional information, see the “Dynalub 510 safety data sheet”
R310DE 2052 (2004.04)

Chemical composition	Mineral base oil, special lithium soap, active ingredients	
Identification	KP2K-20	DIN 51 825
Appearance	Light brown-beige, ground-fiber	
Service temperature range	–20 °C to +80 °C	
NLGI grade	2	
Worked penetration	265-295 1/10 mm	DIN ISO 2137
Water resistance	0-60, 1-90	DIN 51 807 T1
Melting point in °C	> 165	DIN ISO 2176
Flash point in °C	> 200 base oil	DIN ISO 2592
Basic oil viscosity	100 mm^2/s 40 °C	DIN 51 562
	10 mm^2/s 100 °C	
Flow pressure at –20 °C	< 1,400 hPa	DIN 51 805
EMCOR test	0/0	DIN 51 802
Density at +25 °C	Approx. 0.92 g/cm^3	DIN 51 757
Copper corrosion	2 (24 h/120 °C)	DIN 51 811
Four ball tester welding load	> 2,000 N	DIN 51 350 T4
Four ball tester impression diameter	0.93 (400 N, 1 h)	DIN 51 350, part 5
Shelf life in container	2 years	

Product description of Dynalub 520

Part number	Packaging unit
R3416 043 00	1 x 400 g
R3416 042 00	Bucket 5 kg
R0419 090 01	5 ml maintenance kit

Dynalub 520 is a lithium-based high-performance grease of NLGI grade 00 that has been specially designed for linear motion technology applications. It is characterized by its good water resistance and corrosion protection properties and can be used at temperatures ranging from –20 °C to +80 °C.

Application area

Under conventional environmental conditions, this ground-fiber, homogeneous grease is ideally suited for the lubrication of linear elements in miniature versions and for use in central lubrication systems.

Technical data

For additional information, see the “Dynalub 520 safety data sheet”
R310DE 2053 (2004.04)

Chemical composition	Mineral base oil, special lithium soap, active ingredients	
Identification	KP00K-20	DIN 51 825
Appearance	Light brown-beige, ground-fiber	
Service temperature range	–20 °C to +80 °C	
NLGI grade	00	
Worked penetration	400-430 1/10 mm	DIN ISO 2137
Water resistance	1-90	DIN 51 807 T1
Melting point in °C	> 160	DIN ISO 2176
Flash point in °C	> 200 base oil	DIN ISO 2592
Basic oil viscosity	100 mm^2/s 40 °C	DIN 51 562
	10 mm^2/s 100 °C	
Flow pressure at –20 °C	< 700 hPa	DIN 51 805
EMCOR test	0	DIN 51 802
Density at +25 °C	Approx. 0.92 g/cm^3	DIN 51 757
Copper corrosion	0-1 (24 h/100 °C)	DIN 51 811
Four ball tester welding load	1,800 N	DIN 51 350 T4
Four ball tester impression diameter	0.80 (400 N, 1 h)	DIN 51 350 T5
Shelf life in container	2 years	

Calculation

On request, we can perform all calculations to your specifications.

See “Design Calculation Service Form” on page 169

Average speed and average load

Where the operating conditions vary (fluctuating speed and load), the service life must be calculated using the average values $\mathbf{F_m}$ and $\mathbf{n_m}$.

– Where the speed fluctuates, the average speed $\mathbf{n_m}$ is calculated as follows:

$$n_m = \frac{|n_1| \cdot q_{t1} + |n_2| \cdot q_{t2} + \ldots + |n_n| \cdot q_{tn}}{100\%} \quad (1)$$

$n_1, n_2, \ldots n_n$	=	speeds in phases 1 ... n	(rpm)
n_m	=	average speed	(rpm)
$q_{t1}, q_{t2}, \ldots q_{tn}$	=	discrete time step in phases 1 ... n	(%)

The following applies to the effective equivalent bearing load:

$$|F_n| > 2.8 \cdot F_{pr} \qquad F_{eff\,n} = |F_n|$$

$$|F_n| \leq 2.8 \cdot F_{pr} \qquad F_{eff\,n} = \left[\frac{|F_n|}{2.8 \cdot F_{pr}} + 1\right]^{\frac{3}{2}} \cdot F_{pr}$$

C	=	dynamic load rating	(N)
$F_{eff\,n}$	=	effective equivalent axial load during phase n	(N)
F_n	=	axial load during phase n	(N)
F_{pr}	=	pre-tensioning force (see tables on pages 148/151)	(N)

– Where the load fluctuates and the speed is constant, the equivalent dynamic axial load $\mathbf{F_m}$ is calculated as follows:

$$F_m = \sqrt[3]{\left|F_{eff\,1}\right|^3 \cdot \frac{q_{t1}}{100\%} + \left|F_{eff\,2}\right|^3 \cdot \frac{q_{t2}}{100\%} + \ldots + \left|F_{eff\,n}\right|^3 \cdot \frac{q_{tn}}{100\%}} \quad (2)$$

$F_{eff\,1}, F_{eff\,2}, \ldots F_{eff\,n}$	=	effective equivalent axial load during phases 1 ... n	(N)
F_m	=	equivalent dynamic axial load	(N)
$q_{t1}, q_{t2}, \ldots q_{tn}$	=	discrete time step for $F_{eff\,1}, \ldots F_{eff\,n}$	(%)

– Where both the load and the speed fluctuate, the equivalent dynamic axial load $\mathbf{F_m}$ is calculated as follows:

$$F_m = \sqrt[3]{\left|F_{eff\,1}\right|^3 \cdot \frac{|n_1|}{n_m} \cdot \frac{q_{t1}}{100\%} + \left|F_{eff\,2}\right|^3 \cdot \frac{|n_2|}{n_m} \cdot \frac{q_{t2}}{100\%} + \ldots + \left|F_{eff\,n}\right|^3 \cdot \frac{|n_n|}{n_m} \cdot \frac{q_{tn}}{100\%}} \quad (3)$$

$F_{eff\,1}, F_{eff\,2}, \ldots F_{eff\,n}$	=	effective equivalent axial load during phases 1 ... n	(N)
F_m	=	equivalent dynamic axial load	(N)
$n_1, n_2, \ldots n_n$	=	speeds in phases 1 ... n	(rpm)
n_m	=	average speed (rpm)	
$q_{t1}, q_{t2}, \ldots q_{tn}$	=	discrete time step for $F_{eff\,1}, \ldots F_{eff\,n}$	(%)

Nominal service life

Service life in revolutions L

$$L = \left[\frac{f_{ac} \cdot C}{F_m}\right]^3 \cdot 10^6 \quad (4) \Rightarrow C = \frac{F_m}{f_{ac}} \cdot \sqrt[3]{\frac{L}{10^6}} \quad (5) \Rightarrow F_m = \frac{f_{ac} \cdot C}{\sqrt[3]{\frac{L}{10^6}}} \quad (6)$$

C	=	dynamic load rating	(N)
F_m	=	equivalent dynamic axial load	(N)
L	=	nominal service life in revolutions	(–)
f_{ac}	=	Correction factor for tolerance grades (see page 141)	

Service life in hours L_h

$$L_h = \frac{L}{n_m \cdot 60} \quad (7)$$

L_h	=	Service life	(hrs)
L	=	service life in revolutions	(–)
n_m	=	average speed	(rpm)

$$L_{h\ machine} = L_h \cdot \frac{DC_{machine}}{DC_{BASA}} \quad (8)$$

$DC_{machine}$	=	duty cycle of the machine	(%)
DC_{BASA}	=	duty cycle of the BASA	(%)
$L_{h\ machine}$	=	nominal service life of the machine	(h)
L_h	=	nominal service life of the ball screw assembly	(h)

Drive torque and drive power

You must check end machining for the maximum permissible torque

Drive torque M_{ta}

For conversion of rotary motion to linear motion

$$M_{ta} = \frac{F_L \cdot P}{2000 \cdot \pi \cdot \eta} \quad (9)$$

$$M_{ta} \leq M_p$$

F_L	=	thrust force	(N)
M_p	=	maximum permissible drive torque	(Nm)
M_{ta}	=	drive torque	(Nm)
P	=	lead	(mm)
η	=	mech. efficiency ($\eta \approx 0.9$)	(–)

Transmitted torque M_{te}

for conversion of linear motion into rotary motion:

$$M_{te} = \frac{F_L \cdot P \cdot \eta'}{2000 \cdot \pi} \quad (10)$$

$$M_{te} \leq M_p$$

F_L	=	thrust force	(N)
M_p	=	maximum permissible drive torque	(Nm)
M_{te}	=	transmitted torque	(Nm)
P	=	lead	(mm)
η'	=	mech. efficiency ($\eta' \approx 0.8$)	(–)

The dynamic drag torque must be taken into account for preloaded nut units.

Drive power P_a

$$P_a = \frac{M_{ta} \cdot n}{9\,550} \quad (11)$$

M_{ta}	=	drive torque	(Nm)
n	=	speed	(rpm)
P_a	=	drive power	(kW)

⚠ With critical applications, you must pay attention to the information below.

Static load safety factor S_0

You must verify mathematically any structural design involving rolling contact with regard to the static load safety factor.

In this connection, $F_{0\ max}$ represents the maximum load amplitude that can occur, which can affect the screw drive.
It does not matter whether this load is exerted only for a short period.
It may represent the peak amplitude of an overall dynamic loading.
For design purposes, the data shown in the table applies.

$$S_0 = C_0 / (F_{0\ max}) \quad (12)$$

C_0	=	Static load rating	(N)
$F_{0\ max}$	=	Maximum static load	(N)
S_0	=	Static load safety factor	(-)

Design of the static load safety factor in relation to the operating conditions

Operating conditions	Static load safety factor S_0
Overhead arrangements and applications representing a high hazard potential	≥ 12
High dynamic load when at standstill, contamination.	8 - 12
Normal design of machinery and plant without full knowledge of the load parameters or connection details.	5 - 8
Full knowledge of all the load data. Vibration-free operation is ensured.	3 - 5

If there are health and safety hazards, protection against falling loads must be provided (see the chapter entitled “Arrestor nut”)

Calculation

Calculation example service life

Operating conditions
The service life of the machine should be 40,000 operating hours with the BASA operating 60% of the time.

Proposed BASA: 63 x 10

F_1	=	50 000 N	at	n_1	=	10 rpm	for	q_1	= 6% of the duty cycle
F_2	=	25 000 N	at	n_2	=	30 rpm	for	q_2	= 22% of the duty cycle
F_3	=	8 000 N	at	n_3	=	100 rpm	for	q_3	= 47% of the duty cycle
F_4	=	2 000 N	at	n_4	=	1000 rpm	for	q_4	= 25% of the duty cycle
									100%

Calculation procedure

Average torque $\mathbf{n_m}$

$$n_m = \frac{6}{100} \cdot |10| + \frac{22}{100} \cdot |30| + \frac{47}{100} \cdot |100| + \frac{25}{100} \cdot |1000| \quad (1)$$

$$n_m = 304 \text{ rpm}$$

Equivalent dynamic axial load $\mathbf{F_m}$ for variable load and variable speed

$$F_m = \sqrt[3]{\left|50000\right|^3 \cdot \frac{|10|}{304} \cdot \frac{6}{100} + \left|25000\right|^3 \cdot \frac{|30|}{304} \cdot \frac{22}{100} + \left|8000\right|^3 \cdot \frac{|100|}{304} \cdot \frac{47}{100} + \left|2000\right|^3 \cdot \frac{|1000|}{304} \cdot \frac{25}{100}} \quad (3)$$

$$F_m = 8\,757 \text{ N}$$

Required service life **L** (revolutions)
The service life **L** can be calculated by transposing formulas (7) and (8):

$$L = L_h \cdot n_m \cdot 60$$

$$L_h = L_{h\ machine} \cdot \frac{DC_{BASA}}{DC_{machine}}$$

$$L_h = 40\,000 \cdot \frac{60}{100} = 24000 \text{ h}$$

$$L = 24\,000 \cdot 304 \cdot 60$$

$$L = 437{,}760{,}000 \text{ revolutions}$$

Basic dynamic load rating **C**

$$C = 8\,757 \cdot \sqrt[3]{\frac{437\,760\,000}{10^6}} \quad (5) \qquad C \approx 66\,492 \text{ N}$$

Result and selection
Now a selection can be made from the dimension tables:

e.g. ball screw assembly,
size 63 x 10 R x 6-6, with preloaded FEM-E-S single flange nut,
dyn. load capacity C = 106,600 N,
part no. R1512 640 13,
with screw tolerance grade 7.

Attention:
Take into account the dynamic load rating of the screw end bearing used!

⚠ **Take into account correction factor f_{ac} of the tolerance grade! See page 141.**

Cross-check
Now the following can be selected from the product tables:

Size 63 x 10 R x 6-6

Backlash (C0)

FEM-E-S, with standard backlash
Load rating $C_{dyn} = 106{,}560$ N
correction factor $f_{ac} = 0.9$
Cross-check
Service life of the selected ball screw drive in revolutions

$$L = \left(\frac{0.9 \cdot 106\,560}{8\,757}\right)^3 \cdot 10^6$$

$L \approx 1314 \cdot 10^6$ revolutions

Service life in hours L_h

$$L_h = \frac{1\,314 \cdot 10^6}{304 \cdot 60}$$

$L_h \approx 72{,}039$ hours

Preload (preload class C3)

FEM-E-S, with preload class C3
Load rating $C_{dyn} = 106{,}560$ N
Correction factor $f_{ac} = 0.9$
Pre-tensioning force = 4400 N
Cross-check
The following applies to the effective equivalent bearing load:

$$|F_n| > 2.8 \cdot F_{pr} \quad F_{eff\,n} = |F_n|$$

$$|F_n| \leq 2.8 \cdot F_{pr} \quad F_{eff\,n} = \left(\frac{|F_n|}{2.8 \cdot F_{pr}} + 1\right)^{\frac{3}{2}} \cdot F_{pr}$$

C	=	dynamic load rating	(N)
$F_{eff\,n}$	=	effective equivalent axial load during phase n	(N)
F_n	=	axial load during phase n	(N)
F_{pr}	=	pre-tensioning force (see tables on pages 148/151)	(N)

$2{,}8 \times F_{pr} = 2.8 \times 4\,440$ N = 12 432 N

- $F_1 = 50\,000$ N > 12 432 N ➠ $F_{eff1} = 50\,000$ N
- $F_2 = 25\,000$ N > 12 432 N ➠ $F_{eff2} = 25\,000$ N
- $F_3 = 8\,000$ N < 12 432 N ➠ $F_{eff3} = \left(\frac{8\,000}{12\,432} + 1\right)^{1.5} \cdot 4440\text{ N} = 9\,355$ N
- $F_4 = 2\,000$ N < 12 432 N ➠ $F_{eff4} = \left(\frac{2\,000}{12\,432} + 1\right)^{1.5} \cdot 4\,440\text{ N} = 5\,553$ N

$$F_m = \sqrt[3]{|50000|^3 \cdot \frac{|10|}{304} \cdot \frac{6}{100} + |25000|^3 \cdot \frac{|30|}{304} \cdot \frac{22}{100} + |9355|^3 \cdot \frac{|100|}{304} \cdot \frac{47}{100} + |5553|^3 \cdot \frac{|1000|}{304} \cdot \frac{25}{100}}$$

$F_m = 9\,485$ N

$$L = \left(\frac{0.9 \cdot 106\,560}{9\,485}\right)^3 \cdot 10^6 = 1034 \cdot 10^6 \text{ revolutions}$$

$$L_h = \frac{1\,034 \cdot 10^6}{304 \cdot 60} = 56{,}689 \text{ hours}$$

The service life of both BASAs (with standard backlash C0/with preload class C3) exceeds the required service life of 40,000 x 60% = 24,000 hours. This means that it is possible to choose a smaller BASA, subject to a review of it being undertaken.

Critical speed n_{cr}

The critical speed n_{cr} depends on the diameter of the screw, the type of end fixity, and the free length l_{cr}. No allowance must be made for guidance by a nut with backlash. The operating speed should not be more than 80% of the critical speed.

The characteristic speed and the max. permissible linear speed must be taken into account, see “Technical notes” on page 132.

Example

Screw diameter = 63 mm
Length l_{cr} = 2.4 m
End fixity II (fixed bearing - floating bearing)

According to the graph, the critical speed is 1850 rpm.
The permissible operating speed is 1850 rpm x 0.8 = 1480 rpm.

The maximum operating speed in our calculation example of
n_4 = 1000 rpm is therefore below the permissible operating speed.

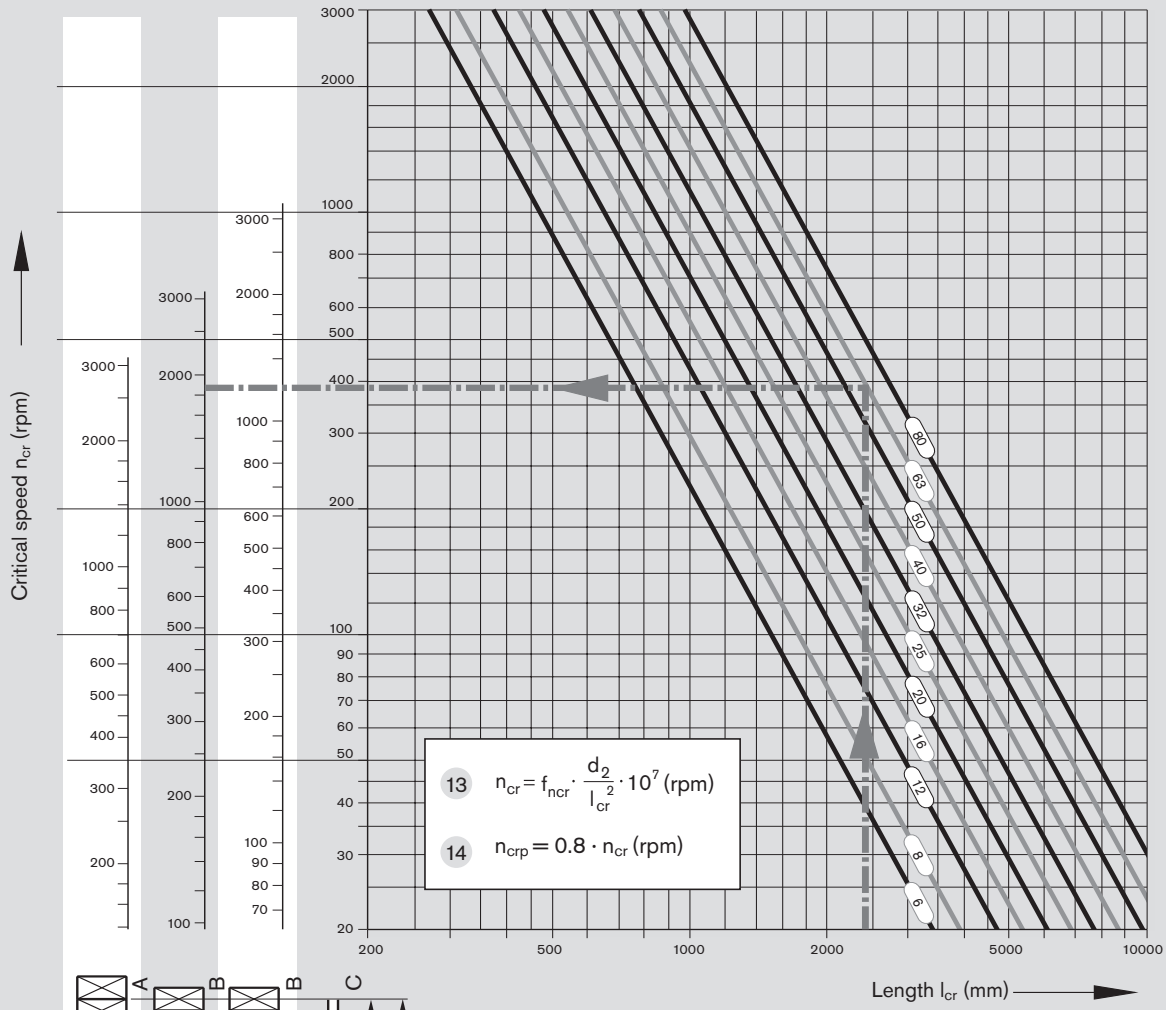

$$13 \quad n_{cr} = f_{ncr} \cdot \frac{d_2}{l_{cr}^2} \cdot 10^7 \text{ (rpm)}$$

$$14 \quad n_{crp} = 0.8 \cdot n_{cr} \text{ (rpm)}$$

End fixity:
A = fixed bearing
B = floating bearing
C = without bearing

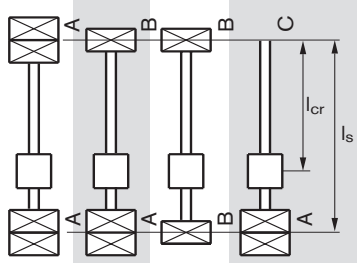

End fixity	I	II	III	IV
f_{ncr} - value	27.4	18.9	12.1	4.3

n_{cr}	=	Critical speed	(rpm)
n_{crp}	=	Permissible operating speed	(rpm)
f_{ncr}	=	Coefficient determined by bearing	
d_2	=	Root diameter of screw (see dimension tables)	(mm)
l_{cr}	=	Critical length for preloaded nut systems	(mm)
l_s	=	Bearing - bearing distance	(mm)

For non-preloaded nut systems $l_{cr} = l_s$
For screw ends Form 31, the end fixity can be assumed to be “fixed”.

Attention: End fixity IV (fixed-floating) – only recommended for short overall lengths if installed horizontally. For longer overall lengths, the floating end must be supported. Please contact our specialist department if you have any questions.

Permissible axial load on screw F_c (buckling load)

The permissible axial load on the screw F_c depends on the diameter of the screw, the type of end fixity, and the effective unsupported length l_c.

A safety factor of $s \geq 2$ should be taken into account for axial loading.

Example

Screw diameter	=	63 mm,
Lead	=	10 mm,
Length l_c	=	2.4 m

End fixity IV (fixed bearing - floating bearing)

According to the graph, the theoretically permissible axial load is 360 kN. Applying the safety factor 2 yields a permissible axial load on the screw in operation of 360 kN : 2 = 180 kN.

This therefore lies above the maximum operating load of F_1 = 50 kN used in our calculation example.

15 $$F_c = f_{Fc} \cdot \frac{d_2^4}{l_c^2} \cdot 10^4 \text{ (N)}$$

16 $$F_{cp} = \frac{F_c}{2} \text{ (N)}$$

F_c = Theoretically permissible axial load on screw (N)
F_{cp} = Permissible axial load on screw during operation (N)
f_{Fc} = Corrector value determined by bearing
d_2 = Root diameter of screw, see dimension tables (mm)
l_c = unsupported thread length (mm)

End fixity:	coefficient f_{Fc}	
	nut fixed	nut floating
A – A 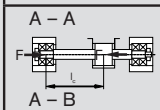 A – B 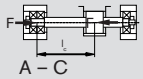 A – C 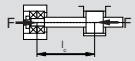	End fixity I 39.7	End fixity IV 20.3
B – B 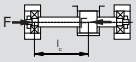	End fixity II 20.3	End fixity V 9.9
A – C 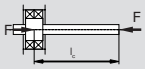	End fixity III 2.5	
A – C 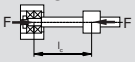		End fixity VI 2.5

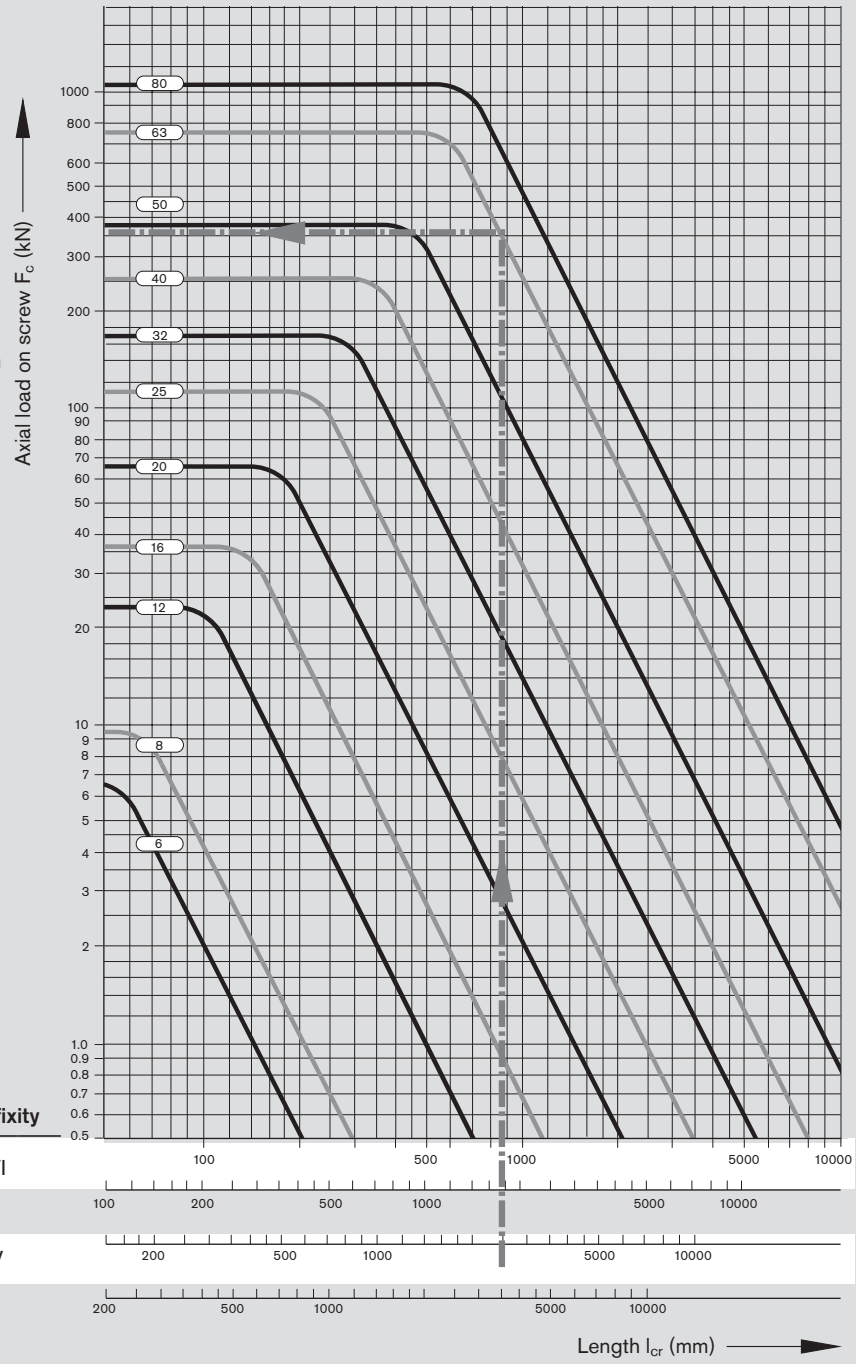

f_{Fc} value	End fixity
2.5	III / VI
9.9	V
20.3	II / IV
39.7	I

End fixity:

A = fixed bearing
B = floating bearing
C = without bearing

Notes on buckling

The effective buckling length l_c of the screw is the maximum unsupported screw length in the direction of the force's flow between the nut unit and the fixed bearing (center-to-center distance) or between the nut unit and the screw end.

For buckling load calculations, the nut is taken into consideration as a bearing.

For "nut fixed," the following conditions must be met:
- zero-backlash nut,
- rigid attachment of the nut to the linear guide,
- the nut unit is not subjected to moment loads, i.e. a linear guide absorbs any arising moments,
- no distortive stresses due to external factors (for example, temperature).

In linear motion systems from Bosch Rexroth, the nut can be considered to be a fixed bearing.
If one or more of the conditions for "nut fixed" are not met, the appropriate coefficients for "nut floating" must be used instead.

Case III occurs in applications with driven nuts, for example, when the nut is stationary and the screw rotates. The nut can then be regarded as a fixed bearing.
Case VI arises only when the nut unit is not supported by any linear guide.

Design of drive unit FAR-B-S

Fundamental advantages of systems with driven nuts

Moment of inertia

In the case of long screws, the screw does not have to be rotated in the acceleration phase, only the nut. The mass moment of inertia of the screw is not therefore critical. The moment of inertia of the nut is comparatively low and it is no longer dependent on the required stroke.

Dynamics

The intricate end bearing designs required for high dynamics, for example, fixed bearing on both ends with angular-contact ball bearings, are no longer necessary.

Screw extenders

Since the screw is stationary, relatively little effort is needed to stretch the screw:
- Increase in permissible axial loading (buckling load); not limited by end bearings
- Compensation of responses to temperature changes
- Increase in overall rigidity

Liquid cooling

- Improved cooling can easily be provided using a hollow-bored screw:
- the stationary screw can be cooled with comparatively little effort.
- Controlled cooling virtually eliminates changes in length due to temperature fluctuations.

Design and manufacturing tolerances

The use of nuts with a high level of axial and radial runout precision minimizes the induced screw vibration.
All functional components are supplied from a single source. In-house designs are no longer needed.

Critical speed

$$n_{cr} = f_{ncr} \cdot \frac{d_2}{l_{cr}^2} \cdot 10^7 \ (\text{min}^{-1})$$

$$n_{crp} = 0.8 \cdot n_{cr} \ (\text{rpm})$$

n_{cr}	=	Critical speed	(rpm)
n_{crp}	=	Perm. operating speed	(rpm)
f_{ncr}	=	Coefficient determined by the bearing	
d_2	=	For root diameter of screw, see dimension tables	(mm)
l_{cr}	=	Critical length for preloaded nut systems	(mm)

Critical speed with driven screw:

In the case of driven, rotating screws, there is a critical speed that is dependent on the different end fixities:

I Fixed-fixed,
II Fixed-floating,
III Floating-floating,
IV Fixed-free.

In the case of systems with a driven screw, the bending-critical speed frequently represents a limitation on speed that can be reached.
The rotating screw itself generates vibrations in the system due to the deflection in the horizontal fixity or even due to screw imbalance. Depending on the free screw length and the speed, resonance and very high amplitudes can result that may destroy the system.
At the design stage, a safety distance of 20% to the critical speed is generally maintained.

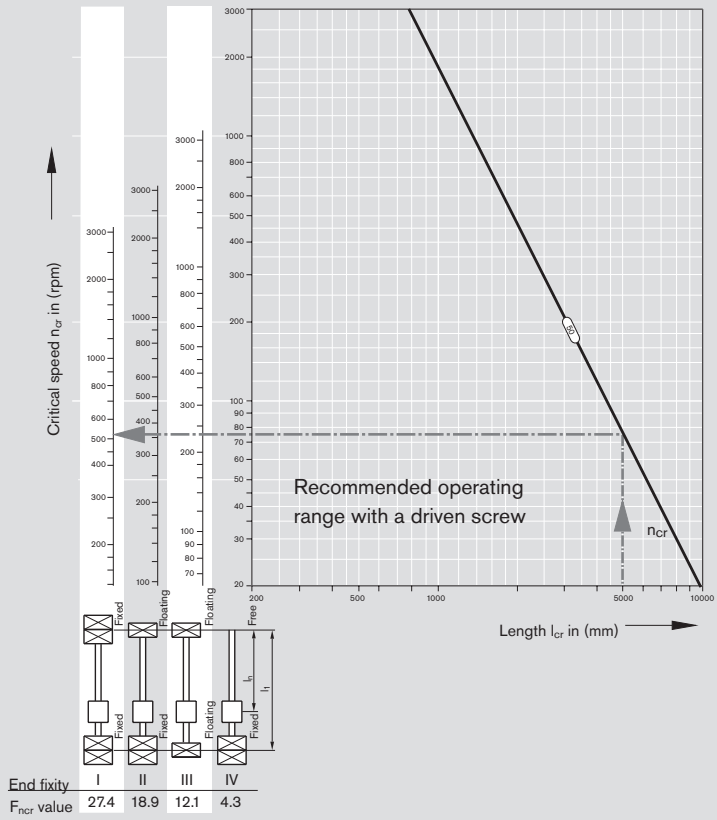

Critical speed with driven nut:

In the case of systems with a driven nut and a stationary screw, self-excitation of the screw is omitted completely with a suitable design.
The only other things that excite vibrations are the manufacturing precision of the rotating nut or of the machine's construction
Since FAR-B-S drive units only use nuts are that have been manufactured with a high degree of axial and radial run-out accuracy, this means that it is possible to rule out any negative effect on the overall system.
This means that the bending-critical speed no longer represents a limitation.
The maximum speed of the bearings that are used and, to a lesser extent, the high maximum permissible rotary speed (d_0 x n Wert) of the nut that is used, are still a limitation.

Note:
Applies to fixed-fixed bearing only

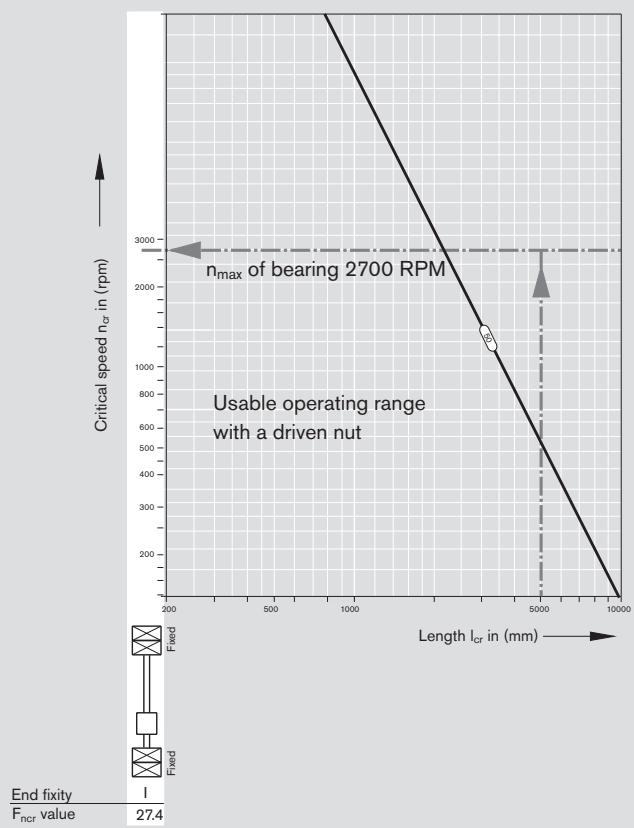

Design of drive unit FAR-B-S

Permissible travel speed in dependence on the nut position

Permissible travel speed with a driven nut
End fixity I fixed-fixed bearing
End fixity II fixed-floating bearing

Parameters:
- Screw length
- Screw diameter
- Lead
- End fixity
- Stretching force, negligible
- Max. speed of bearing
- D x n value of nut

The adjacent diagrams make clear the benefits of a driven nut compared to a "classical ball screw assembly" with a driven screw using size 50 x 40R x 6.5 as an example.
In the case of the driven screw (diagram at the top), the maximum speed with a favorable nut position in the center of the screw is about 60 m/min. However, this speed is only achieved in one position of the stroke. In the case of a non-central nut position, however, it is only possible to achieve about 20 m/min, since the necessary support for the screw is missing. This means that the potential for a high characteristic speed of the nut (d x n value) cannot be achieved in practice.
Driven nut
With the driven nut (diagram at the bottom for end fixity I "fixed-fixed"), however, the permissible travel speed of the driven nut is 108 m/min regardless of the nut position across the entire stroke.
In the case of end fixity II "fixed-floating", the floating bearing (axial displacement possible) can be designed such that it is possible to achieve a tangential gradient of the bending line (bending angle at journal area = 0).
In this case, you can also consider a floating bearing end like this as being a fixed bearing for the calculation.

Improved performance with driven nut

- - - Driven screw

Driven screw

Max. permissible travel speed in dependence on the nut position size 50x40Rx6.5 fixed-fixed bearing on driven screw

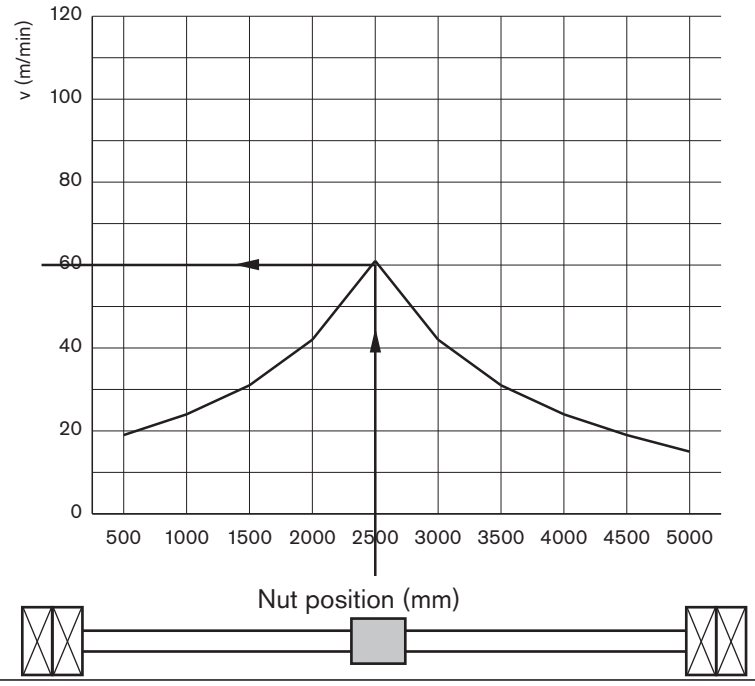

Driven nut

Max. permissible linear speed
Size 50x40Rx6.5 with fixed-fixed bearing with driven nut

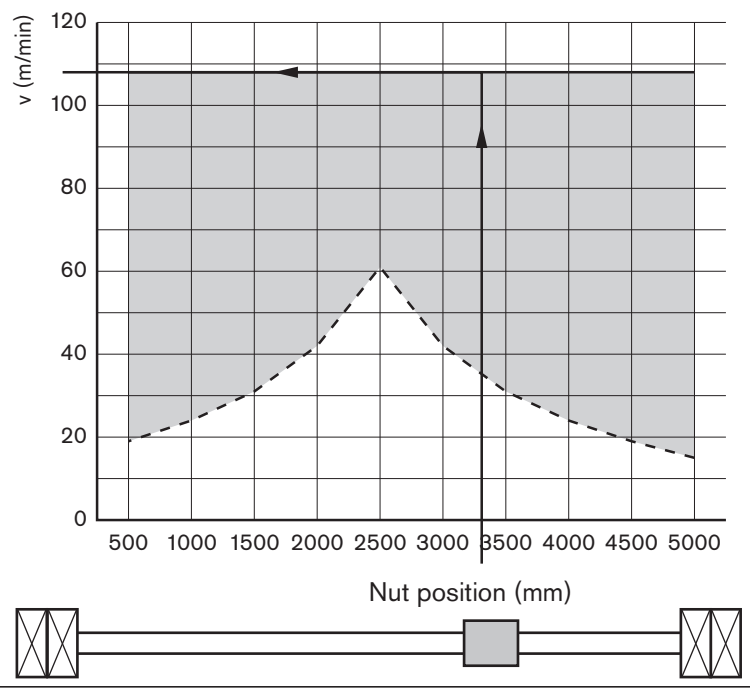

For the permissible RPM and travel speeds of FAR-B-S drive units, refer to the table below:

End fixity I fixed-fixed bearing and end fixity II fixed-floating bearing

FAR-B-S size d_0 x P x D_w - i	Speed n_{max} (rpm)	Speed v_{maxFAR} (m/min)
32 x 10R x 3.969 - 5	3,000	30
32 x 20R x 3.969 - 3	3,000	60
32 x 32R x 3.969 - 3	3,000	96
40 x 10R x 6 - 5	2,800	28
40 x 20R x 6 - 3	2,800	56
40 x 40R x 6 - 3	2,800	112
50 x 10R x 6 - 6	2,700	27
50 x 20R x 6.5 - 5	2,700	54
50 x 40R x 6.5 - 3	2,700	108
63 x 10R x 6 - 6	2,300	23
63 x 20R x 6.5 - 5	2,300	46
63 x 40R x 6.5 - 3	2,300	92

Conversion of rotational speed to velocity

$$v_{max} = \frac{n_{max} \cdot P}{1000}$$

v_{max} = velocity (m/min)
P = lead (mm)
n_{max} = rotational speed (RPM)

End fixity III floating-floating bearing

This type of end fixity is virtually never used.

Critical speed with rotating nut and screw clamping end fixity IV fixed-free bearing

In the case of “fixed-free” systems with a driven nut, it is only possible to design the screw for short strokes. To quote an extreme case as an example, the system mass of the 50 x 40 screw with a length of 5,000 mm and horizontal mounting would lead to extreme static sagging of about 180 mm. You must take appropriate design measures to ensure that considerably lower sagging and the forces on the nut resulting from this can be avoided,
In this case, it is also possible with FAR-B-S to consider as a limitation the critical speed at an unfavorable nut position on the tensile restraint (see the diagram on the right in the middle). The maximum theoretical value that can be read-off is 28 m/min and it cannot be used due to the deflection. This means that for practical applications, you must introduce a screw length limitation.

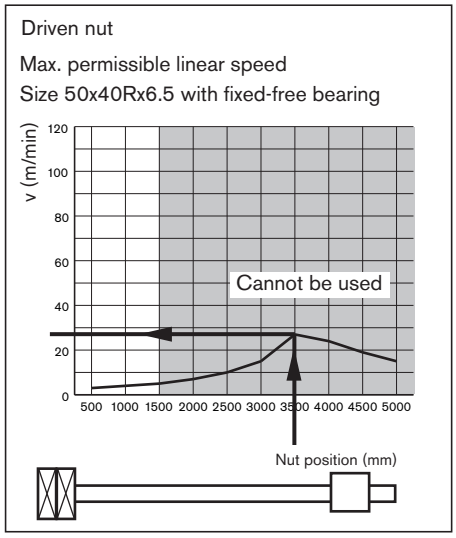

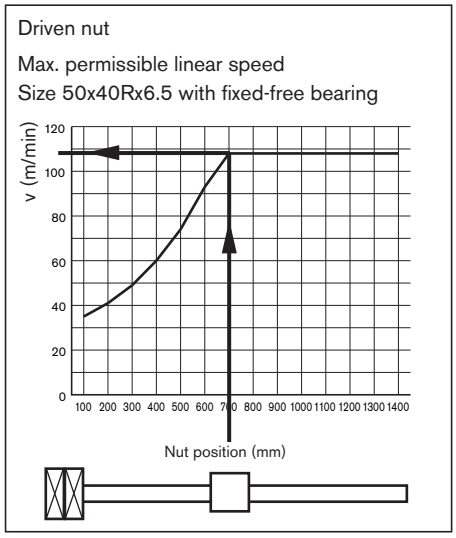

In the example diagram on the right, with the recommended maximum length of screw $L_{thread\ max}$, a speed of 108 m/min is achieved at a nut position of 700 mm.

BASA size	Recommended maximum length (mm) $L_{thread\ max}$
32	1,000
40	1,200
50	1,400
63	1,600

Design of drive unit FAR-B-S

Permissible torques in dependence on the nut position

The influencing variables below limit the permissible drive torque with the driven nut
- Screw length
- Screw diameter
- End fixity
- Stretching force
- Geometry of the screw end
- Load direction; in an unfavorable case, a compressive force on the longer screw section (buckling load)

Buckling load

End fixity:	Coefficient f_{Fc}	
	Nut fixed	Nut floating
A – A A – B A – C	End fixity I 40.6	End fixity IV 20.4
B – B	End fixity II / IV 20.4	End fixity V 10.2
A – C	End fixity III / VI 2.6	
A – C		End fixity VI 2.6

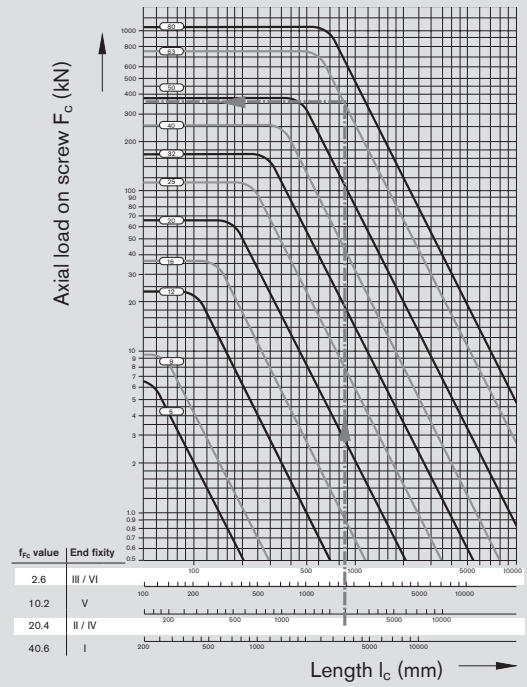

The length and diameter of the screw and its end fixity are taken into account by the Euler buckling case.
This yields the permissible axial load on the screw (see the diagram above). In practice, the adjacent formulas are used for calculation.

$$F_c = f_{Fc} \frac{d_2^4}{l_k^2} \cdot 10^4 \text{ (N)}$$

$$F_{cp} = \frac{F_k}{2} \text{ (N)}$$

$$F_L \leq F_{cp}$$

F_c = Theoretically permissible axial load on screw (N)
F_{cp} = Permissible axial load on screw during operation (N)
f_{Fc} = Corrector value determined by bearing
d_2 = For root diameter of screw, see dimension tables (mm)
l_c = unsupported thread length (mm)
F_L = operating load of the customer (N)
F_{st} = stretching force of the screw (N)

With a stretched screw, the following applies:

$$F_{cp} = \frac{F_c}{2} + F_{st}$$

Due to an increase in temperature, the stretching force may be reduced. You must take this effect into account when calculating F_{kperm}.

The drive torque that is necessary for the operating load results from the following formula:

$$M_{ta} = \frac{F_L \cdot P}{2\,000 \cdot \pi \cdot \eta}$$

The dynamic drag torque must be taken into account for preloaded nut units.

M_{ta} = drive torque on the nut (Nm)
F = operating load (N)
P = lead (mm)
η = mechanical efficiency (approx. 0.9)

$$M_{ta} \leq M_P$$

M_P = permissible torque at the screw journal (Nm)

Recommended maximum torque with the geometry of screw end 51

51

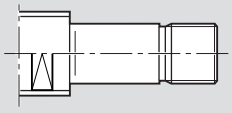

BASA size	M_{Scperm} (Nm)
32	< 40
40	< 150
50	< 180
63	< 190

Typical applications

End fixity I fixed-fixed:
Parameters:
- Screw length; two cases
- Screw diameter
- End fixity in this case, fixed-fixed:
- Stretching force ignored (see the next page)
- Geometry of screw end Form 51 on two sides
- Load direction in an unfavorable case, a compressive force on the longer screw section

Example: A long screw axis, e.g. in the case of water jet cutting, makes possible high drive torque on a nut position-dependent basis

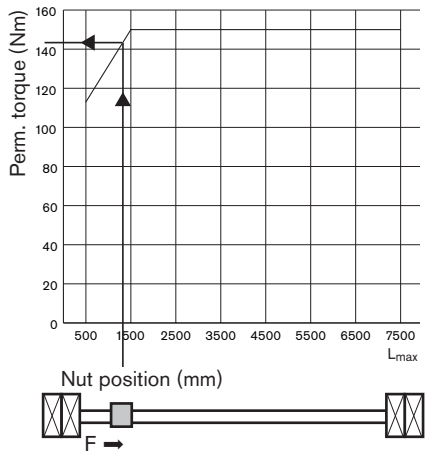

Example: A short screw with a machine tool axis makes possible high drive torque regardless of the nut position

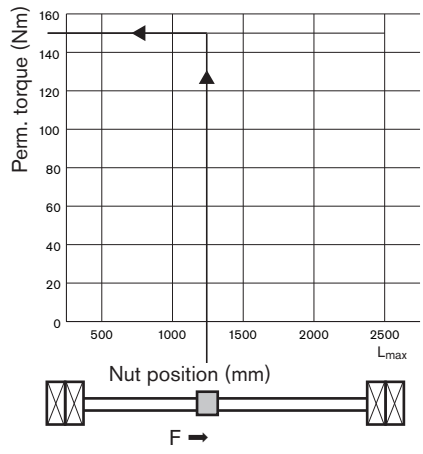

End fixity II fixed-floating:

Stretching is not possible.

End fixity III floating-floating

This type of end fixity is virtually never used.

End fixity IV fixed-free
Parameters:
- Screw length
- Screw diameter
- End fixity, here fixed-free
- Stretching force, none
- Geometry of screw end Form 51 on one side
- Compressive load toward fixed bearing

Example: A short screw in a press application, for example, makes possible high levels of torque

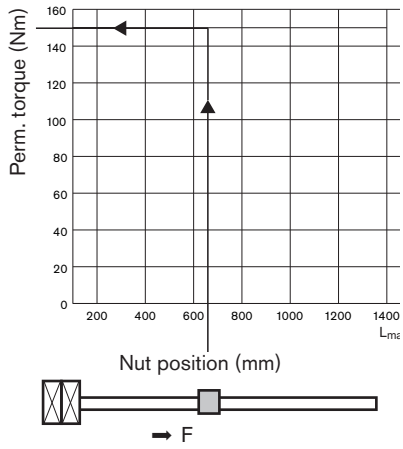

Design of drive unit FAR-B-S

Stretching screws

Basic principles

To be able to exploit the efficiency of a system with a driven nut to the full, it is advisable to use the type of end fixity with fixing of the screw on two sides (fixed-fixed). Stretching of the screw has the following positive effect on the overall system:

– Compensation of temperature effects to avoid compressive loads in the screw, which reduces the risk of buckling

The change in length and the tensile stress that results due to stretching must be kept to a range that is acceptable for the overall system. Otherwise, elastic deformation can lead to impermissible lead deviations between the nut and the screw, which can negatively impact the service life.
In the case of convection cooling of the screw, stretching can maintain a maximum temperature difference of about 10 °C. With long, composite screws, temperature compensation of 5 °C is sensible. Water cooling of the screw is necessary at higher temperature differences.

Fixed mounting

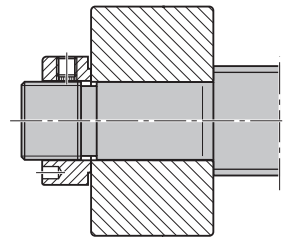

Mounting with cup spring

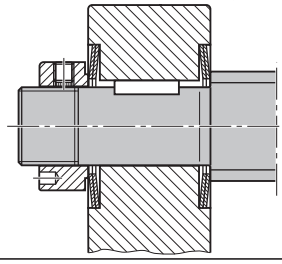

Linear expansion

Calculation of the linear expansion of a screw in operation with a temperature increase.

$$\Delta L = L_{thr} \cdot \alpha_L \cdot (\vartheta_s - \vartheta_r)$$

Where $\alpha_L = 0.0000115$

ΔL	=	linear expansion	(mm)
L_{thr}	=	thread length	(mm)
α_L	=	linear expansion coefficient	(1/K)
ϑ_s	=	Screw temperature in operation	(K)
ϑ_r	=	room temperature	(K)

Stretching force

Calculation of the stretching force that is needed for compensating the linear expansion.

$$F_{st} = \frac{\Delta L \cdot E \cdot \frac{\pi}{4} \cdot d_{ap}^2}{L_{thr}}$$

$$d_{ap} = \frac{d_0 + d_2}{2}$$

F_{st}	=	stretching force	(N)
d_{ap}	=	approximation diameter	(mm)
E	=	Young's modulus	(N/mm^2)
d_0	=	nominal diameter	(mm)
d_2	=	screw core diameter	(mm)

Compressive stress

The compressive stress in the screw that occurs in the case of fixed mounting on two sides is calculated as shown.

$$\sigma_c = E \cdot (\vartheta_s - \vartheta_r) \cdot \alpha_L$$

Where $E = 210{,}000\ N/mm^2$

σ_c	=	compressive stress due to increased temperature	(N/mm^2)

Tensile stress

For operation, the tensile stress in the screw due to stretching must be greater than the compressive force due to temperature. At the same time, the permissible tensile stress must not be exceeded.

Tensile stress due to stretching that is generated in the screw

$$\sigma_t = \frac{F_{st}}{\frac{\pi}{4} \cdot d_{ap}^2}$$

σ_t = tensile stress (N/mm²)

$$\sigma_t < \sigma_p$$

The maximum permissible tension
σ_p = 70 N/mm²

Permissible change in length

Stretching results in a change of length of the screw, which causes a change in the geometry of the screw and the raceway geometry. To avoid negative effects on the service life of the ball screw assembly, you must check it.

$$\Delta L_{perm} = L_{thr} \cdot 0.0001$$

ΔL_{perm} = perm. linear expansion (mm)
L_{thr} = thread length (mm)

$$\Delta L \leq \Delta L_{perm}$$

Design notes, installation

Bearing design

For customer machining, please consider the design notes for screw ends and housings.
For Rexroth screw end designs, see "End Machining Details."
Rexroth delivers complete drive systems including bearing units without housing. Calculations are performed with the formulas used in the antifriction bearing industry.

Screw end

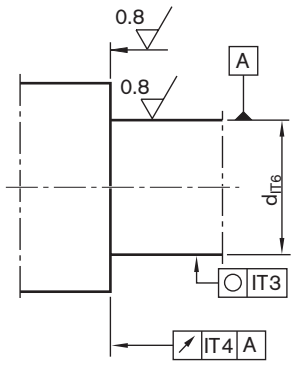

Housing

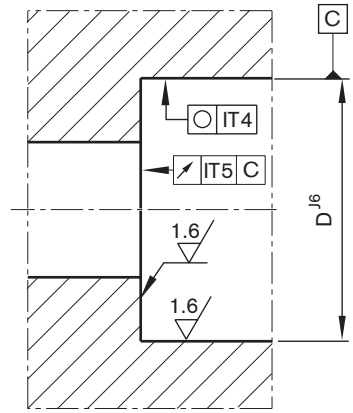

Mounting

Angular-contact thrust ball bearings and deep-groove ball bearings
When mounting the angular-contact thrust ball bearings LGF and LGN, ensure that the mounting forces are exerted only on the bearing rings. Never apply mounting forces via the anti-friction bearing elements or the seal rings! The two sections of the inner raceway may not be separated during assembly or disassembly for any reason!
Tighten the mounting screws for screw-down or flange-mounted bearings in crosswise sequence. The mounting screws may be subjected only to tension amounting to a maximum of 70% of their yielding point.
The screw-down (LGF) bearings have a groove on the cylindrical surface of the outer raceway for disassembly. The individual bearings of the bearing pair series LGF-C... and LGN-C... are marked on the cylindrical surfaces of the outer raceways (see figure). The markings reveal the bearing sequence. The sealing rings should face outwards after proper mounting.

Outer raceway markings for paired bearings

Slotted nut NMA, NMZ

The bearings are preloaded by tightening the nuts.
In order to prevent settling phenomena, we recommend first tightening the slotted nut by twice the value of the tightening torque M_A and then easing the load. Only then should the slotted nut be retightened to the specified tightening torque M_A.
The two set screws are then alternately tightened using a hexagon socket wrench.
The components are disassembled in the reverse order, i.e. the set screws have to be removed before the slotted nut.
The slotted nuts can be used several times when properly assembled and disassembled by competent personnel. The inner raceways of the bearings are dimensioned in such a way as to achieve a defined bearing preload sufficient for most applications when the slotted nut is tightened (M_A in accordance with dimension table).

Design Note
For counter holding the tightening torque MA of the slotted nut we recommend a wrench flat on the spindle or a hexagon socket on the end face of the spindle.

Mounting the housing

Housing mounting SEB

Tighten the fastening screws of the pillow-block bearings in a crosswise sequence. Refer to the table for the maximum tightening torque. The threaded ring fixes the complete bearing in the housing. Use threadlocking adhesive when assembling the threaded ring.

⚠ Align the screw with nut, the bearings and the guide such that they are completely flush with one another. The Rexroth gauge is suitable as an aid.

Size d_0xP	h (mm)	O_1 DIN 912	O_2 DIN 912	O_3, tapered pin (hardened) O_4, straight pin (DIN 6325)
6x1/2	8	M5x20	M6x16	4x20
8x1/2/2,5/5	8	M5x20	M6x16	4x20
12x2/5/10	8	M5x20	M6x16	4x20
16x5/10/16	11	M8x35	M10x25	8x40
20x5/10/20/40	11	M8x35	M10x25	8x40
25x5/10/25	14	M10x40	M12x30	10x50
32x5/10/20/32/64	14	M10x40	M12x30	10x50
40x5/10/12/16/20/25/30/40	16	M12x50	M14x35	10x50
50x5/10/12/16/20/25/30/40	16	M12x55	M14x35	10x60
63x10/20/40	16	M12x65	M14x35	10x70
80x10/20	22	M16x70	M20x50	12x80

Tightening

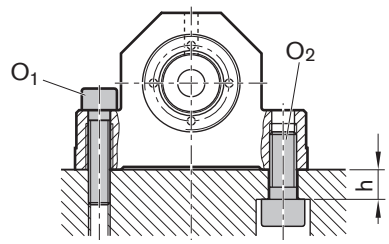

Locating pins

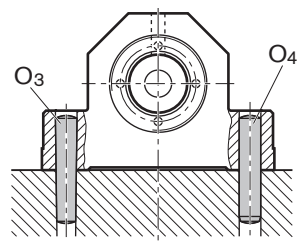

Tightening torques for fastening screws according to VDI 2230 where $\mu_G = \mu_K = 0.125$ (friction coefficient)

Steel/steel material pairing

	Strength class for O_1; O_2	M5	M6	M8	M10	M12	M14	M20
(Nm)	**8.8**	5.5	9.5	23	46	80	125	390
	12.9	9.5	16.0	39	77	135	215	650

Steel/aluminum and aluminum/ aluminum material pairings

	Strength class for O_1; O_2	M5	M6	M8	M10	M12	M14	M20
(Nm)	**8.8**	4.8	8.5	20	41	70	110	345
	12.9	4.8	8.5	20	41	70	110	345

Mounting screws

⚠ Always make sure the screws are secure where there are high screw loads!

Lubrication of the end bearings

Bearings for ball screw assemblies are lubricated with grease for a lifetime of reliable service. It should be noted, however, that grease lubrication does not facilitate the dissipation of heat in the bearings. The bearing temperature should therefore not exceed 50 °C, particularly in machine tool applications. At higher temperatures circulating oil lubrication must be set up. Angular-contact thrust ball bearings of series LGF, LGN are lifetime-lubricated with KE2P-35 grease as per DIN 51825. For regreasing, the quantities stated in the table below can be applied via the lube ports provided on the bearings. Where there are pairs of bearings, please note that each bearing must be individually lubricated via the lube port. Each bearing must be lubricated with half the value shown in the table.The maximum interval can be assumed to be 350 million revolutions, in which case the larger of the two quantities should be used. As a rule, the initial grease quantity will therefore last for the entire service life of a ball screw assembly.

Relubrication quantities for angular-contact thrust ball bearings

Abbreviation		Quantity (cm^3)		Abbreviation		Quantity (cm^3)		Abbreviation		Quantity (cm^3)	
			1)		2)		1)				1)
LGN-B-0624		0.33	0.22								
LGN-B-1034		0.33	0.22								
LGN-B-1242	LGF-B-1255	0.43	0.33								
LGN-B-1747	LGF-B-1762	0.54	0.43								
LGN-B-2052	LGF-B-2068	0.87	0.54								
LGN-B-2557	LGF-B-2575	1.09	0.65	LGN-C-2557	LGF-C-2575	2.17	1.3				
LGN-B-3062	LGF-B-3080	1.09	0.65	LGN-C-3062	LGF-C-3080	2.17	1.3				
LGN-B-3572	LGF-B-3590	1.74	0.98								
LGN-A-4075		2.17	1.30					LGN-A-4090	LGF-B-40115	6.52	3.80
LGN-A-5090		2.72	1.63					LGN-A-50110	LGF-A-50140	9.78	5.98

1) Shortened lubricating interval max. 10 M revolutions
2) Where there are pairs of bearings, lubricate each bearing via the lube port.
Lubricate each bearing with half the value shown in the table.

Calculation

Resulting and equivalent bearing loads

For angular-contact thrust ball bearings LGN and LGF

Angular-contact thrust ball bearings are preloaded. The chart shows the resulting axial bearing load F_{ax} as a function of preload and axial operating load F_{Lax}.
For a purely axial load $F_{comb} = F_{ax}$.

$\alpha = 60°$	X	Y
$\frac{F_{ax}}{F_{rad}} \leq 2.17$	1.90	0.55
$\frac{F_{ax}}{F_{rad}} > 2.17$	0.92	1.00

α = pressure angle
F_{ax} = resulting bearing load
F_{Lax} = operating load
X, Y = dimensionless factor

If the radial operating forces are not insignificant, the equivalent bearing loads are calculated according to formula 20.
Bearings for ball screw assemblies are also suitable to accommodate tipping forces. The moments that usually occur due to the mass and drive motion of the screw do not generally need to be included in the calculation of the equivalent bearing load.

$$F_{comb} = X \cdot F_{rad} + Y \cdot F_{ax} \quad (20)$$

F_{ax} = resulting axial bearing load (N)
F_{comb} = combined equivalent bearing load (N)
F_{rad} = radial bearing load (N)

Internal preload limit and resulting bearing load

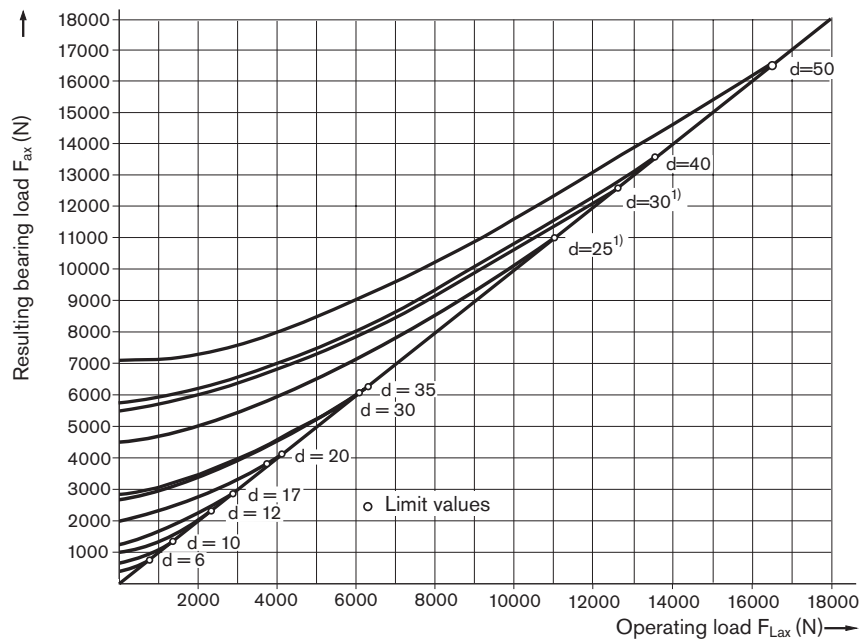

1) Four row version

Permissible static axial load for bearing series LGF

The permissible static axial load of LGF series bearings in screw-down direction is:

$$F_{0ax\,p} \leq \frac{C_0}{2}$$

$F_{0ax\,p}$ = permissible static axial bearing load (N)

The static axial load rating C_0 is stated in the Dimension Tables.

⚠ **Separate technical dimensioning to determine the limit values is absolutely necessary for all attachments (e.g. pillow block units, bearing assembly, etc.)**

Calculation

Resulting and equivalent bearing loads

$$F_{comb} = X \cdot F_{rad}^{A} + Y \cdot F_{ax}^{B} + Z \quad (21)$$

F_{ax} = axial bearing load (N)
F_{comb} = combined equivalent bearing load (N)
F_{rad} = radial bearing load (N)
X, Y, Z = calculation factors (–)
A, B = exponents (–)

For angular-contact thrust ball bearings LGL
Before determining the combined equivalent load, F_{comb}, you must check the bearing size for the static limit load using the diagram. In this connection, the intersection point of the axial and radial bearing load must be below the muss boundary for a bearing to be suitable for the application.

Bearing size	X	Y	Z	A	B
LGL-D-0624	0.003	0.1300	140	1.90	1.40
LGL-A-1244	0.076	0.0460	580	1.28	1.30
LGL-A-1547	0.022	0.0110	540	1.45	1.50
LGL-A-2060	0.017	0.0082	960	1.45	1.50

Static limit load

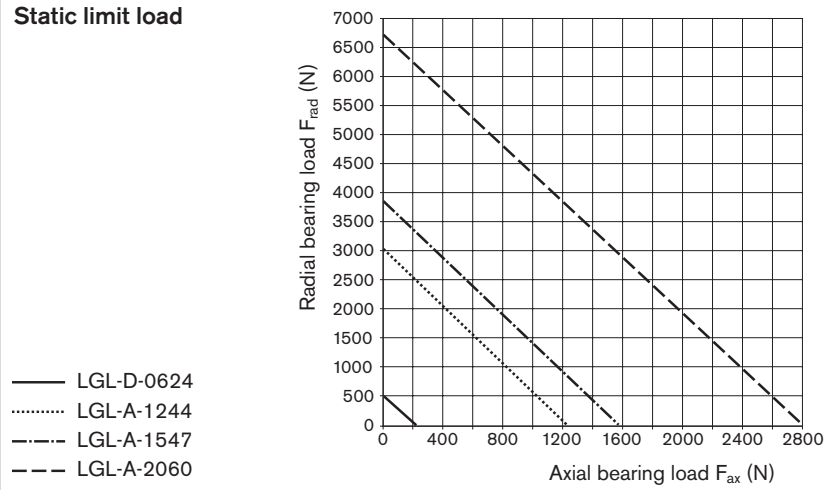

Average speed and average bearing load
When the bearing load varies in steps over a specific period of time (22), calculate the dynamic equivalent bearing.
When the speed varies, use formula (23). In these formulas q_t denotes the discrete time steps for the individual phases in %.

$$F_m = \sqrt[3]{F_{comb1}^{3} \cdot \frac{|n_1|}{n_m} \cdot \frac{q_{t1}}{100} + F_{comb2}^{3} \cdot \frac{|n_2|}{n_m} \cdot \frac{q_{t2}}{100} + \ldots + F_{combn}^{3} \cdot \frac{|n_n|}{n_m} \cdot \frac{q_{tn}}{100}} \quad (22)$$

$$n_m = \frac{q_1}{100} \cdot n_1 + \frac{q_2}{100} \cdot n_2 + \ldots + \frac{q_n}{100} \cdot n_n \quad (23)$$

$F_{comb1} \ldots F_{combn}$ = combined equivalent axial load in phases 1 ... n (N)
F_m = equivalent dynamic axial bearing load (N)
$n_1 \ldots n_n$ = speeds in phases 1 ... n (rpm)
n_m = average speed (rpm)
$q_{t1} \ldots q_{tn}$ = discrete time steps in phases 1 ... n (%)

Service life and load safety factor

$$L = \left(\frac{C}{F_m}\right)^3 \cdot 10^6 \quad (24)$$

Nominal service life
The nominal service life is calculated as follows:

$$L_h = \frac{16\,666}{n_m} \cdot \left(\frac{C}{F_m}\right)^3 \quad (25)$$

Attention:
Pay attention to the dynamic load rating of the nut!

C = dynamic bearing load rating (N)
F_m = equivalent dynamic axial bearing load (N)
L = nominal service life in revolutions (–)
L_h = nominal service life in operating hours (h)
n_m = average speed (rpm)

Static load safety factor
The static load safety factor for machine tools should not be lower than 4.

$$S_0 = \frac{C_0}{F_{0max}} \quad (26)$$

F_{0max} = maximum static load (N)
C_0 = static load capacity (N)
S_0 = static load safety factor (–)

Bosch Rexroth
Linear Motion Technology

97419 Schweinfurt / Germany

Company: _____
Contact: _____
E-mail: _____
Telephone: _____

Find your local contact person here: www.boschrexroth.com/adressen

Application

New design ☐ Revised design ☐

Operating conditions

Discrete time step parameters			or	Dynamic cycle parameters												
Discrete time steps (%)	**Speed** (1/min)	**Action of force x**	**Section**	**T1**	**T2**	**T3**	**T4**	**T5**	**T6**	**T7**	**T8**	**T9**	**T10**	**T11**	**T12**
T_1 =	n_1 =		**Path** (mm)												
T_2 =	n_2 =		**V** (m/s)												
T_3 =	n_3 =		**a** (m/s^2)												
T_4 =	n_4 =		**Time** (s)												
T_5 =	n_5 =		**Action of force x**												
T_6 =	n_6 =														

	F1	F2	F3	F4	F5	F6
Forces (N) =						
	m1	**m2**	**m3**	**m4**	**m5**	**m6**
Mass (kg) =						

Bearing center-to-center distance	(mm) =		**or**	**Max. stroke**	(mm) =	

Bearing type

1. ☐ Tight

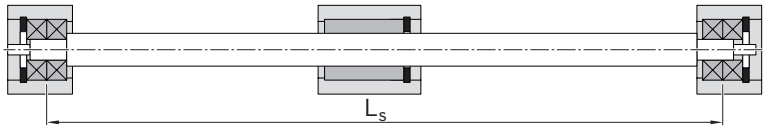

Tight

Installation Position
Horizontal ☐
Vertikal ☐

2. ☐ Tight

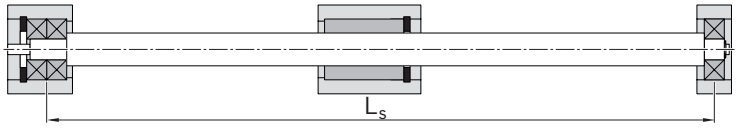

Loose

Drawing enclosed (recommended) ☐

3. ☐ Tight

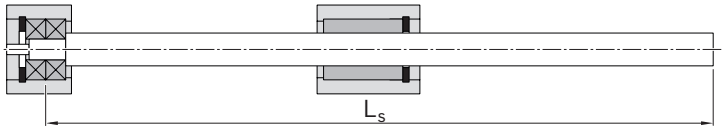

Free

Delivery with bearing ☐

Required life: Operating temperature: °C Up to °C

Type of lubrication:

Short description of the application / unusual operating conditions:

Visit out official homepage and use the provided configurators and our dimensioning program Linear Motion Designer free of charge.

Planetary screw assemblies PLSA

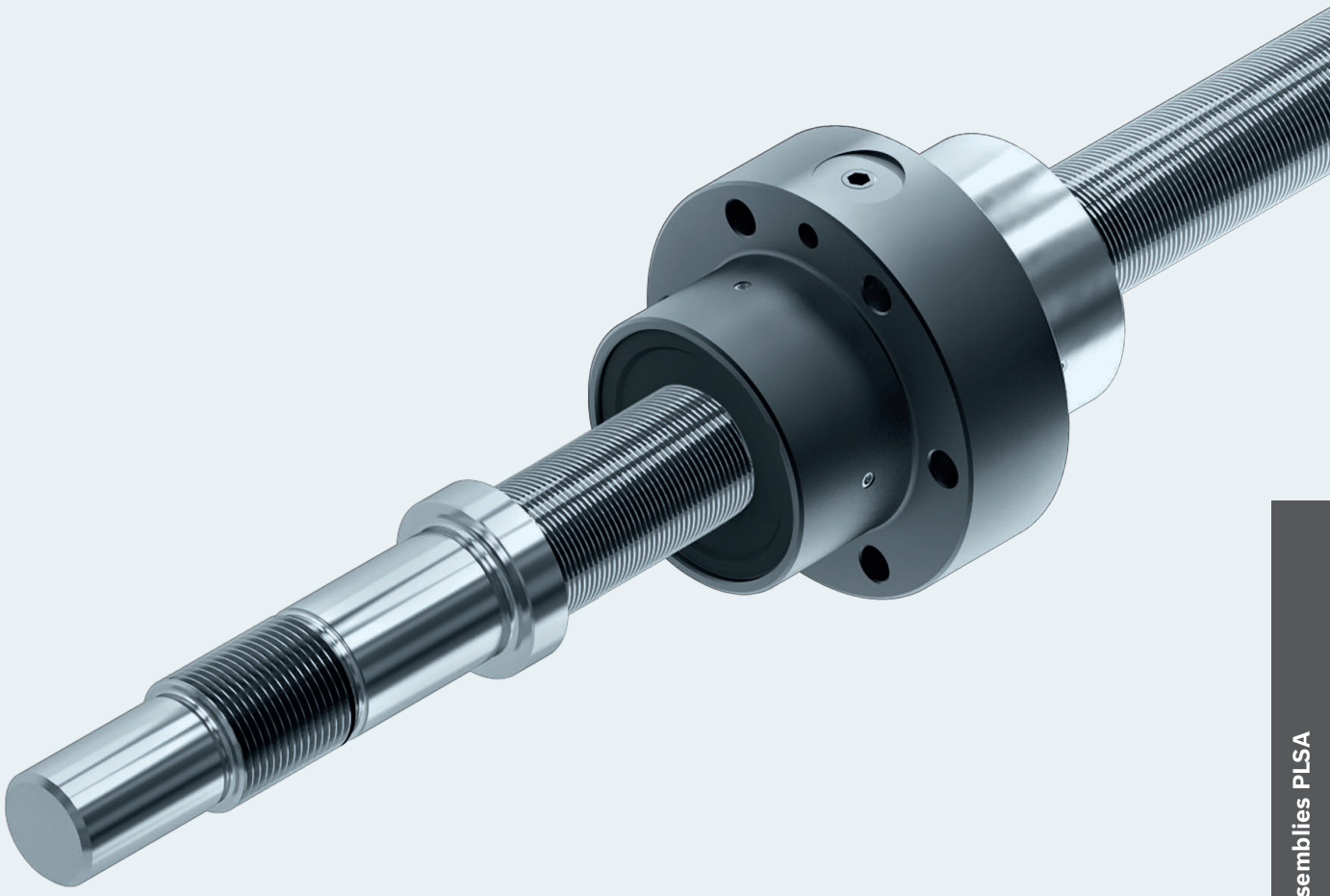

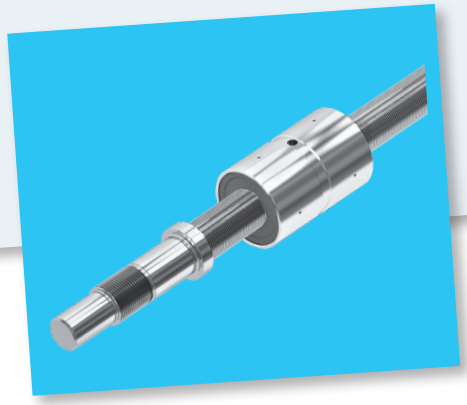

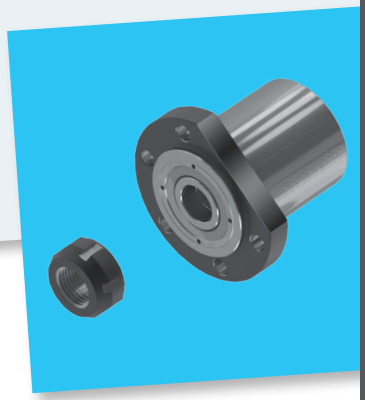

New features at a glance

The divided FDM-E-S of the single nut with flange nut type has been discontinued.

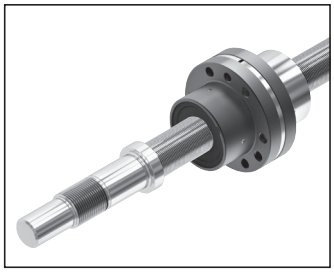

▲ **FDM-E-S**

New screw sizes 25x5 and 25x10

To add to our product portfolio, the intermediate sizes 25 with leads 5 and 10 have been issued.

This size is available for the nut types cylindrical single nut ZEM-E-S and single nut with flange FEM-E-S.

Cover plate wiper

To expand on our seal system, the cover plate wiper has been issued.

This is suitable especially for applications in the temperature range of 60° and higher.

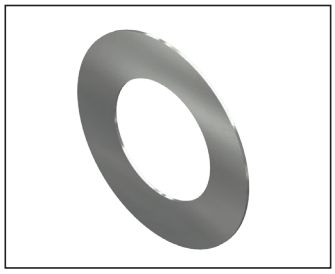

▲ **Cover plate wiper**
without friction torque,
TRD = 0 Nm

Expansion of the documentation

Option 5 = Two-point compensation

This kind of documentation is intended to compensate for the lead error of a screw.

Table of contents planetary screw assemblies

New features at a glance **192**

Table of contents **193**

Product overview **194**
Nuts, screws, screw ends, bearings 194
Planetary screw assembly – definition 195

Sample applications **196**

Inquiries and orders **198**

Overview of formats/abbreviations **199**

Nuts **200**
Cylindrical single nut ZEM-E-S 200
Single nut with flange FEM-E-S 202

Screws **204**
Precision screw PSR 206

Screw ends **206**
Abbreviations 207
Form 002 207
Form 112, 122 208
Form 132, 142 210
Form 212, 222 212
Form 312 214
Form 412 216
Form 512, 522 218
Form 532, 542 220
Form 612, 622 222
Form 812, 822 226
Form 832, 842 228
Form 912, 922 230
Form 932, 942 232

Accessories **234**
Overview 234
Bearing assembly LAF 236
Bearing assembly LAN 238
Bearing assembly LAD 240
Bearing assembly LAS 242
Bearing assembly FEC-F 244
Slotted nuts NMA for fixed bearings 246
Ring nut GWR 247
Measuring pads 248

Technical data **250**
Technical notes 250
Acceptance conditions and tolerance grades 253
Preload, rigidity, friction torques 256

Installation **258**
Installation tolerances 260

Lubrication **261**

Calculation **264**

End bearings **270**
End bearings 271
Lubrication of the end bearings 272

Design calculation service form **274**

Further information **275**

Nuts, screws, screw ends, bearings

Nuts		Page
Cylindrical single nut **ZEM-E-S** Preload class: C0, C2		**200**
Single nut with flange **FEM-E-S** Preload class: C0, C2		**202**
Screws		
Precision screw PSR Tolerance grades T5, T7, T9	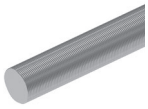	**204**
Acceptance conditions		**253**
Screw ends		
	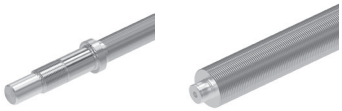	**210**
Bearing		
LAF		**236**
LAN		**238**
LAD		**240**
LAS		**242**
FEC-F		**244**
Accessories		
Slotted nut NMA		**246**
Ring nut GWR		**247**
Measuring pads		**248**

Diameter d_0 (mm)	**Lead P** (mm)		
	5	**10**	**20**
20	X	–	–
25	X	X	–
30	X	X	–
39	X	X	–
48	X	X	–
60	–	X	X
75	–	X	X

Product overview

Planetary screw assembly – definition

The planetary screw assembly PLSA is a complete cylindrical screw assembly with planets as the rolling elements. It serves to convert rotary motion into linear motion and vice versa.
The basic functioning of a planetary screw assembly is easy to describe, but the range of designs and the requirements for practical applications are many and varied.
Planetary screw assemblies are designed to transmit high forces and thus round off the upper end of the screw assembly product portfolio.
Planetary screw assemblies are drive technology screw assemblies in which threaded rollers (the planets) are housed in a threaded nut, their ends being lodged in discs with holes arranged around a pitch circle so that they rotate axially parallel to the special threaded screw, causing the nut to move linearly along the screw.

Rexroth planetary screw assemblies offer design engineers many opportunities to solve transport and positioning tasks with a driven screw. At Rexroth you will be sure to find exactly the kind of tailor-made products you need for special applications.

Structural design:
Both the screw and the nut have an identical multi-start profile with a flank angle of 90°.
The planets have journals at both ends, which are lodged in holes bored in the guide discs. The toothed ends of the planets engage with the internal gear rims of the nut. The planets have single-start threads and crowned flanks that roll without slipping along the nut threads.

At each end of the nut there are internally geared rims which engage with the external gearing on the planets. Guide discs inside the gear rims support the planets' journals and ensure that they are correctly spaced. The discs also prevent coarse dirt from working its way into the nut.

Versions:
- Cylindrical single nut with backlash or preload (ZEM-E-S)
- Single nut with flange with backlash or preload (FEM-E-S)

Precision screws PSR

Bosch Rexroth has a long tradition of manufacturing precision screws. Offered in many sizes and in unmatched quality, these have been an integral part of our ball screw assembly product range for years.

We have now transferred this tried and trusted manufacturing technology to the screws of our panetary screw assemblies.
For users, this results in many advantages, including the following:
- Identical quality to Rexroth ball screw assemblies
- Fast delivery
- Attractive prices thanks to cost-effective manufacturing

Benefits

- Smooth functioning due to the principle of synchronized planets
- Very low noise
- High linear travel speeds
- Large number of contact points
- High load ratings
- High mechanical efficiency
- Long service life
- Compact design
- High power density
- Effective, wiping sealing
- Low lubricant consumption
- Pre-tensioned units available
- High positioning accuracy and repeatability

Sample applications

Rexroth planetary screw assemblies are used with great success in many different application areas:

- Plastic injection molding machines
- Machine tools
- Measuring and material testing machines
- Robots
- Automotive industry
- Aerospace industry
- Automation and handling
- Food and packaging industries
- Printing and paper industry
- Medical technology
- Cutting operations
- Forming operations
- Metals industry

Electric press

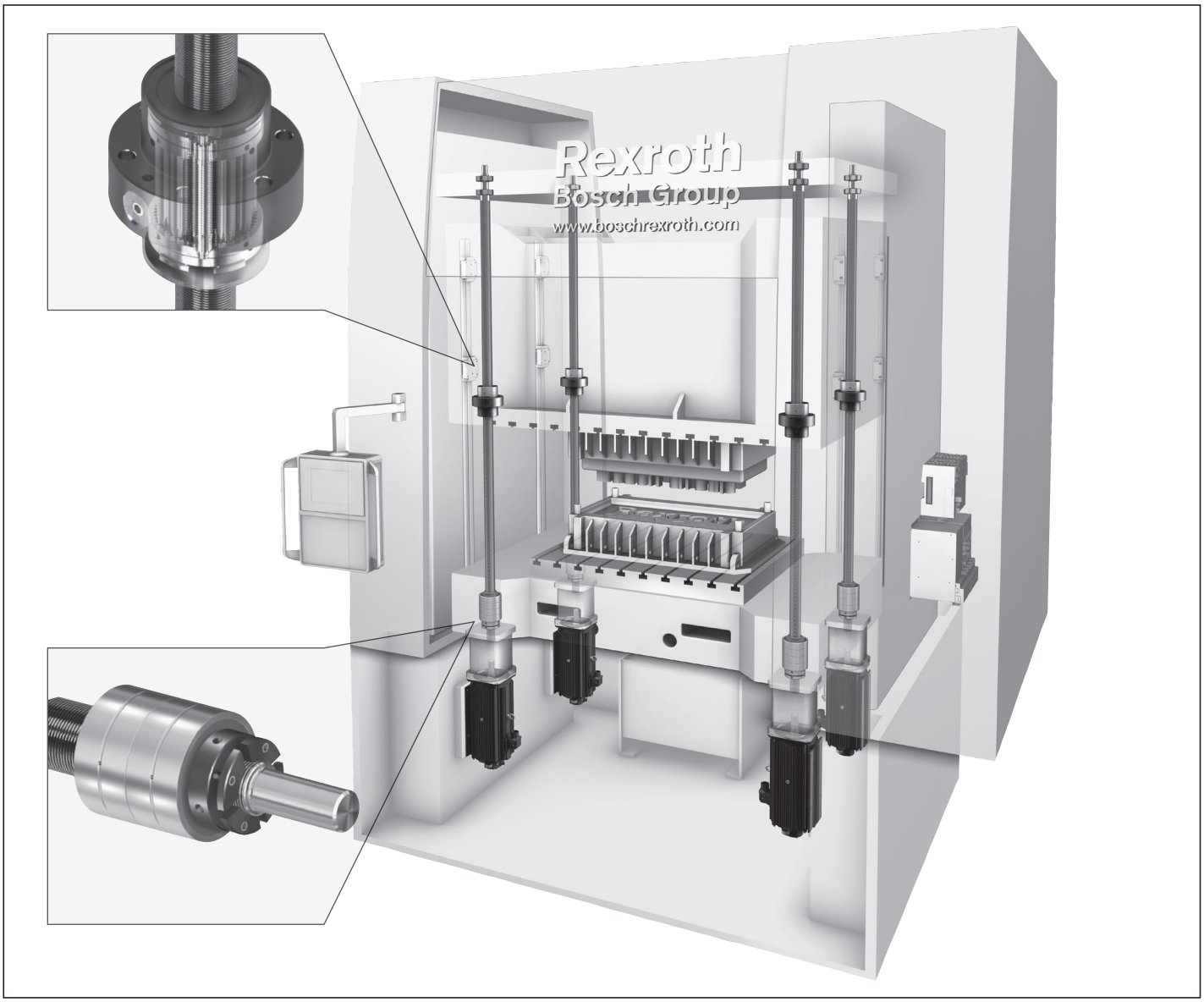

Friction welding machine

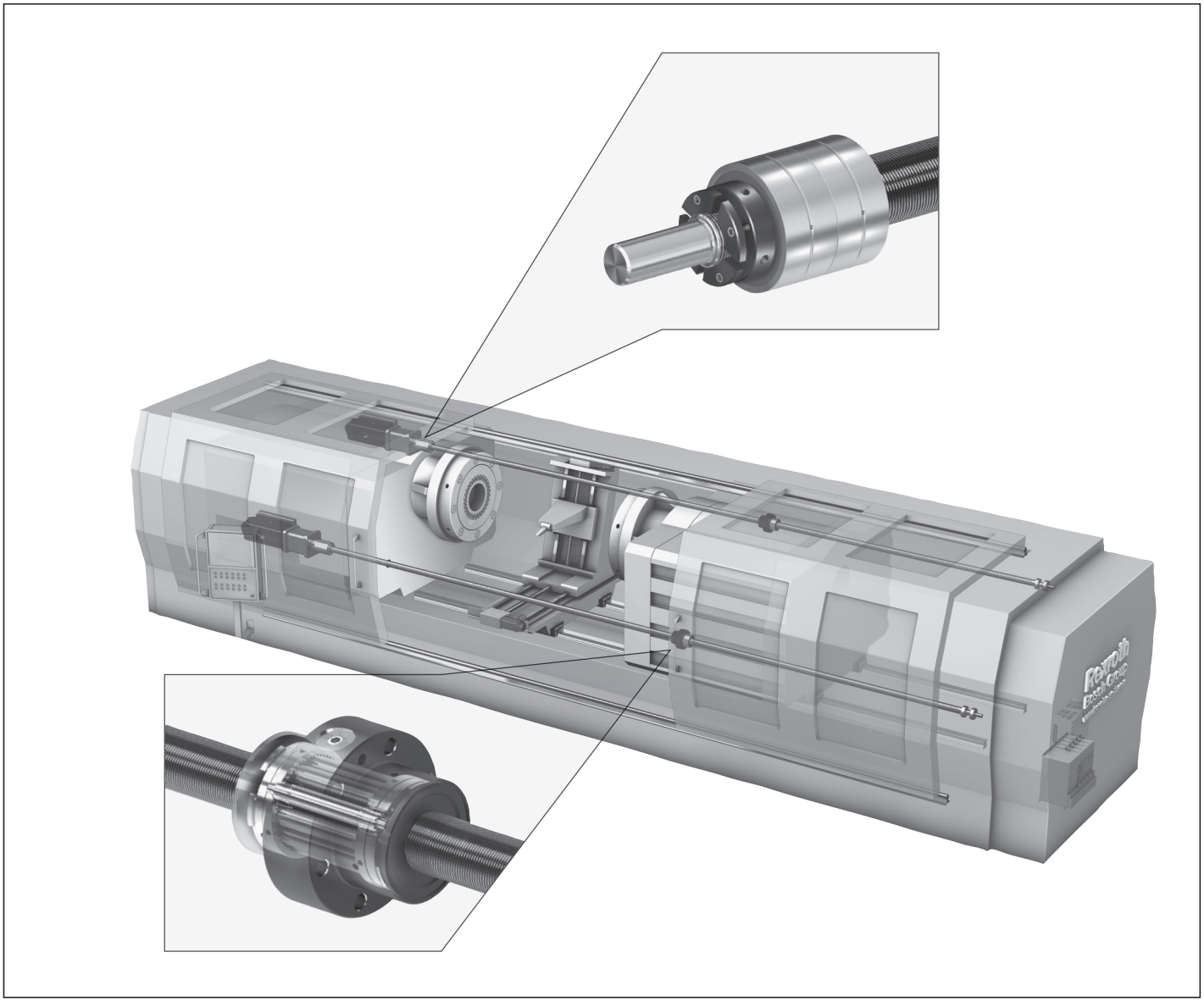

Identification system for short product names PLSA / ordering data

Planetary screw assembly																		
Size	Nominal diameter (mm)																	
	Lead (mm)																	
	Direction of lead, **R** ... right																	
Nut type	ZEM-E-S Cylindrical Single Nut																	
	FEM-E-S Single nut with flange																	
Nut rework	**00** ... no rework																	
Sealing system	0 ... without		4 ... gap-type seal (standard)															
	1 ... lip-type seal		5 ... Wiper															
Preload classes	**0** ... C0 (standard backlash)																	
	1 ... C2 (average preload)																	
Accuracy	T5, **T7**, T9																	
Screw	**R** ... Precision screw																	
Left screw end	Form:	... standard form																
	Option:	**Z**... centering as per DIN 332-D																
		S... hex socket																
		G... female thread																
		K ... none																
	Versions:																	
Right screw end	... see left screw end																	
Overall length [mm]																		
Documentation	**1** ... standard (acceptance test report)																	
	2 ... torque test report																	
	3 ... lead test report																	
Lubrication	**1** ... preserved and nut with basic greasing																	
	2 ... preserved																	

	PLSA	**20 x 5 R**	**FEM-E-S**	**00**	**1**	**0**	**T7**	**R**	**812**	**Z**	**120**	**412**	**Z 120**	**1250**	**1**	**1**

Mounting direction of nut types

Definition: The centering diameter on nuts with a flange points to the right end of the screw. The mounting direction for cylindrical nuts is freely selectable (symmetrical).

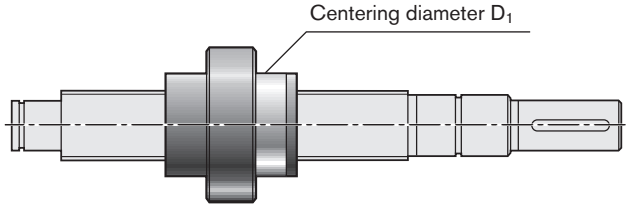

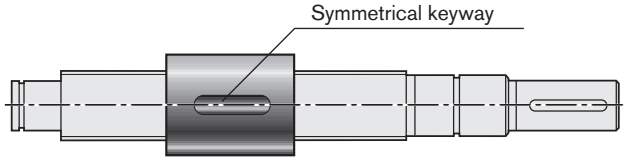

Overview of formats

ZEM-E-S

FEM-E-S

Abbreviations

C	=	dynamic load rating
C_0	=	static load rating
d_0 x P	=	size
d_0	=	nominal diameter
F_{aB}	=	axial breaking load of slotted nut
G	=	female thread
J_s	=	moment of inertia
n_G	=	limit speed (grease)
No.	=	part number
M_A	=	tightening torque of slotted nut
M_{AG}	=	tightening torque of set screw
M_{RL}	=	bearing friction torque with seal
M_p	=	Maximum permissible drive torque (condition: no radial load at drive journal)
R_{fb}	=	rigidity (axial)
R_{kl}	=	rigidity against tilting
P	=	lead (R = right-hand)
v_{max}	=	maximum speed
S	=	hex socket
Z	=	centering hole

Overview of formats/abbreviations

Cylindrical single nut ZEM-E-S

- With standard seals
- Preload class: C0, C2
- For precision screws PSR in tolerance grade T5, T7, T9 (with backlash only)

Note: Delivered only as a complete unit

Ordering code PLSA:

PLSA	20 x 5R	ZEM-E-S	00	4	0	T7	R	822Z150	412Z120	1250	1	1

d_0 x P	no.	C[1] (kN)	C_0[1] (kN)	v_{max}[2] (m/min)
20 x 5R	R157C A10 03	55	80	37.5
20 x 5R	R157C A10 13	55	80	37.5
25 x 5R	R157C 210 03	65	122	30.0
25 x 10R	R157C 230 03	74	118	60.0
30 x 5R	R157C 310 13	87	178	25.0
30 x 10R	R157C 330 03	101	174	50.0
39 x 5R	R157C 410 03	123	269	19.2
39 x 10R	R157C 430 03	145	271	38.4
48 x 5R	R157C 610 03	188	481	15.6
48 x 10R	R157C 630 03	220	475	31.2
60 x 10R	R157C 730 03	322	780	25.0
60 x 20R	R157C 770 03	375	786	50.0
75 x 10R	R157C 830 03	480	1,487	20.0
75 x 20R	R157C 870 03	544	1,496	40.0

1) The load ratings are valid for tolerance grade T5 only.
For other tolerance grades, please consider the correction factor f_{ac} on page 251.
2) See “Characteristic speed” on page 251 and “Critical speed n_{cr}” on page 270

For the codes, see the chapter entitled “Abbreviations”

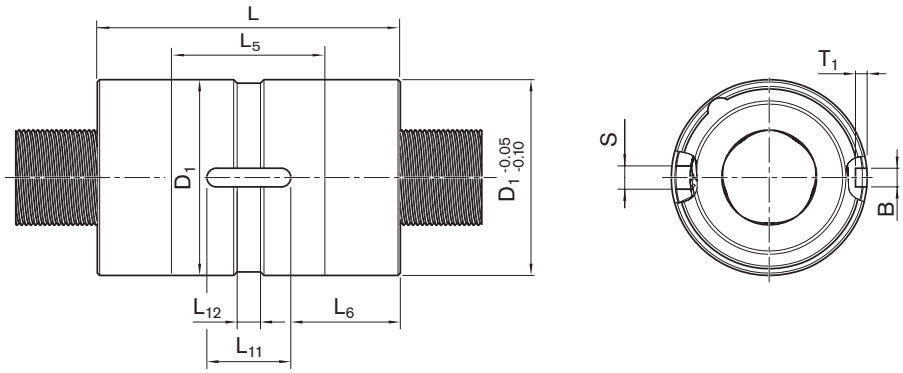

d_0 x P	(mm)									Mass
	B P9	$D_{1\ g6}$	L	L_5	L_6	L_{11} +0.2	L_{12}	T_1 +0.1	S	m (kg)
20 x 5R	4	42	65	34	23.5	18	5.0	2.5	2	0.62
20 x 5R	5	45	64	34	22.0	20	5.0	3.0	2	0.72
25 x 5R	6	53	78	50	26.5	25	5	3.5	5	0.72
25 x 10R	6	53	78	50	26.5	25	5	3.5	5	0.72
30 x 5R	6	64	85	53	26.5	32	5.0	3.5	5	1.25
30 x 10R	6	64	85	53	26.5	32	5.0	3.5	5	1.25
39 x 5R	8	80	100	64	30.0	40	7.0	4.0	5	2.00
39 x 10R	8	80	100	64	30.0	40	7.0	4.0	5	2.00
48 x 5R	8	100	127	87	41.0	45	7.0	4.0	5	4.20
48 x 10R	8	100	127	87	41.0	45	7.0	4.0	5	4.20
60 x 10R	10	122	152	99	53.5	45	10.5	5.0	5	6.82
60 x 20R	10	122	152	99	53.5	45	10.5	5.0	5	6.80
75 x 10R	10	150	191	129	64.0	63	10.5	5.0	5	14.00
75 x 20R	10	150	191	129	64.0	63	10.5	5.0	5	13.70

Single nut with flange FEM-E-S

- With standard seals
- Preload class: C0, C2
- For precision screws PSR in tolerance grade T5, T7, T9 (with backlash only)

Note: Delivered only as a complete unit

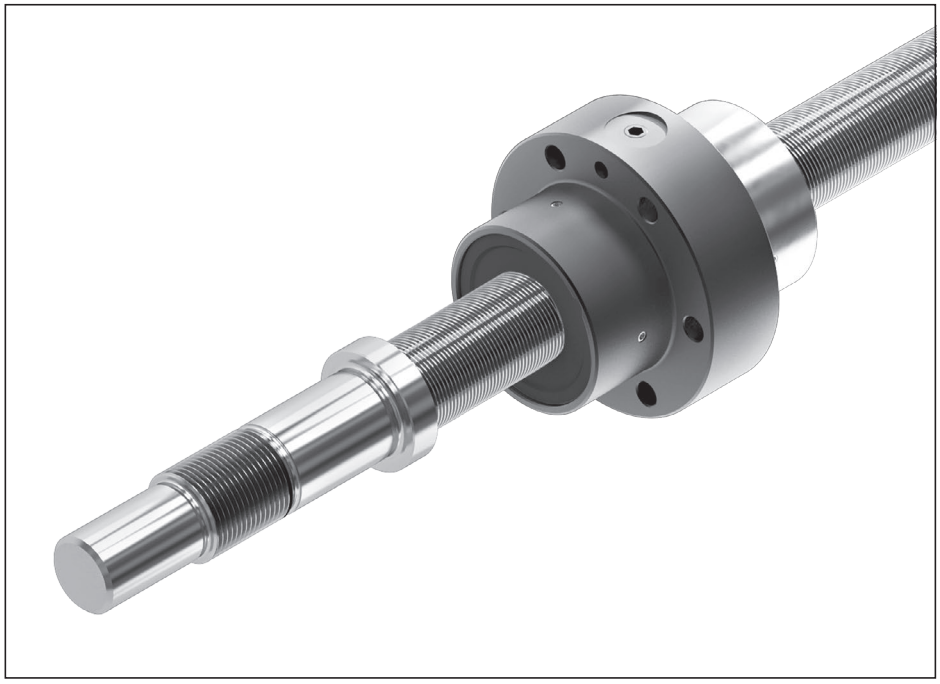

Ordering code PLSA:

PLSA	20 x 5R	FEM-E-S	00	4	0	T5	R	812Z150	412Z120	1100	1	1

d_0 x P	no.	C[1] (kN)	C_0[1] (kN)	v_{max}[2] (m/min)
20 x 5R	R157C A10 01	55	80	37.5
20 x 5R	R157C A10 11	55	80	37.5
25 x 5R	R157C 210 01	65	122	30.0
25 x 10R	R157C 230 01	74	118	60.0
30 x 5R	R157C 310 11	87	178	25.0
30 x 10R	R157C 330 01	101	174	50.0
39 x 5R	R157C 410 01	123	269	19.2
39 x 10R	R157C 430 01	145	271	38.4
48 x 5R	R157C 610 01	188	481	15.6
48 x 10R	R157C 630 01	220	475	31.2
60 x 10R	R157C 730 01	322	780	25.0
60 x 20R	R157C 770 01	375	786	50.0
75 x 10R	R157C 830 01	480	1,487	20.0
75 x 20R	R157C 870 01	544	1,496	40.0

1) The load ratings are valid for tolerance grade T5 only.
For other tolerance grades, please consider the correction factor f_{ac} on Page 251.
2) See “Characteristic speed” on page 251 and “Critical speed n_{cr}” on page 270

For the codes, see the chapter entitled “Abbreviations”

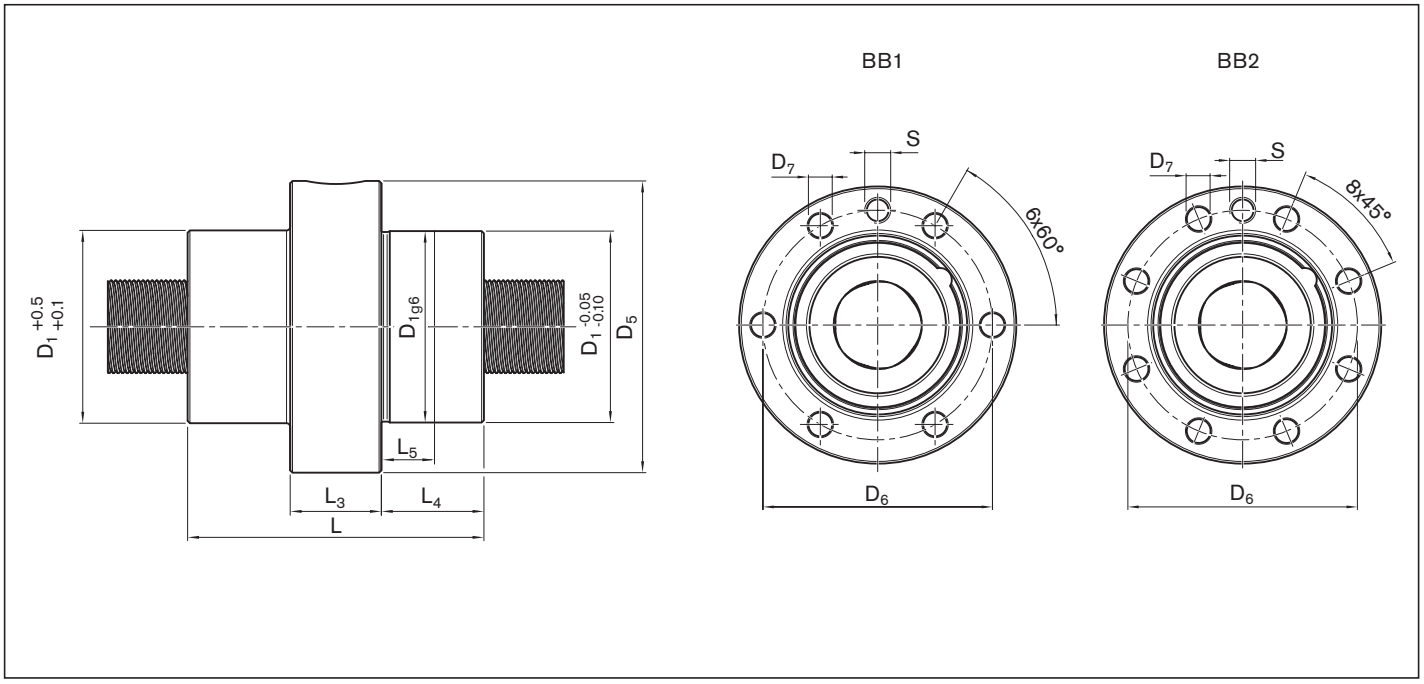

d_0 x P	(mm)										
	D_1	D_5	Hole pattern	L	D_6	D_7	L_3	L_4	L_5	S	m (kg)
20 x 5R	42	64	BB1	65	53	5.5	20.0	22.5	11.0	M6	0.65
20 x 5R	45	68	BB1	64	56	5.5	18.0	23.0	11.0	M6	0.75
25 x 5R	56	84	BB1	78	70	6.6	20.0	29.0	15.0	M6	1.34
25 x 10R	56	84	BB1	78	70	6.6	20.0	29.0	15.0	M6	1.34
30 x 5R	64	98	BB1	85	81	9.0	27.0	29.0	13.0	M6	2.10
30 x 10R	64	98	BB1	85	81	9.0	27.0	29.0	13.0	M6	2.10
39 x 5R	80	124	BB1	100	102	11.0	33.0	33.5	15.5	M6	3.70
39 x 10R	80	124	BB1	100	102	11.0	33.0	33.5	15.5	M6	3.70
48 x 5R	105	150	BB1	127	127	13.5	37.0	45.0	25.0	M8 x 1	7.60
48 x 10R	105	150	BB1	127	127	13.5	37.0	45.0	25.0	M8 x 1	7.60
60 x 10R	122	180	BB1	152	150	17.5	45.0	53.5	27.0	M8 x 1	11.30
60 x 20R	122	180	BB1	152	150	17.5	45.0	53.5	27.0	M8 x 1	11.30
75 x 10R	150	210	BB2	191	180	17.5	45.0	73.0	42.0	M8 x 1	19.40
75 x 20R	150	210	BB2	191	180	17.5	45.0	73.0	42.0	M8 x 1	20.20

Precision screw PSR

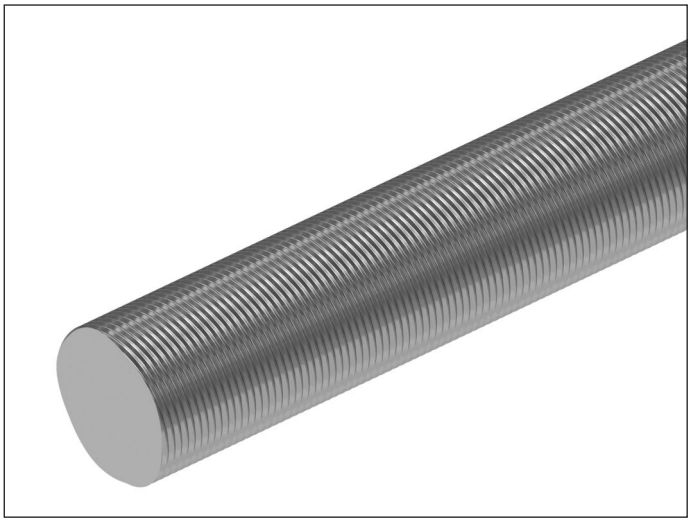

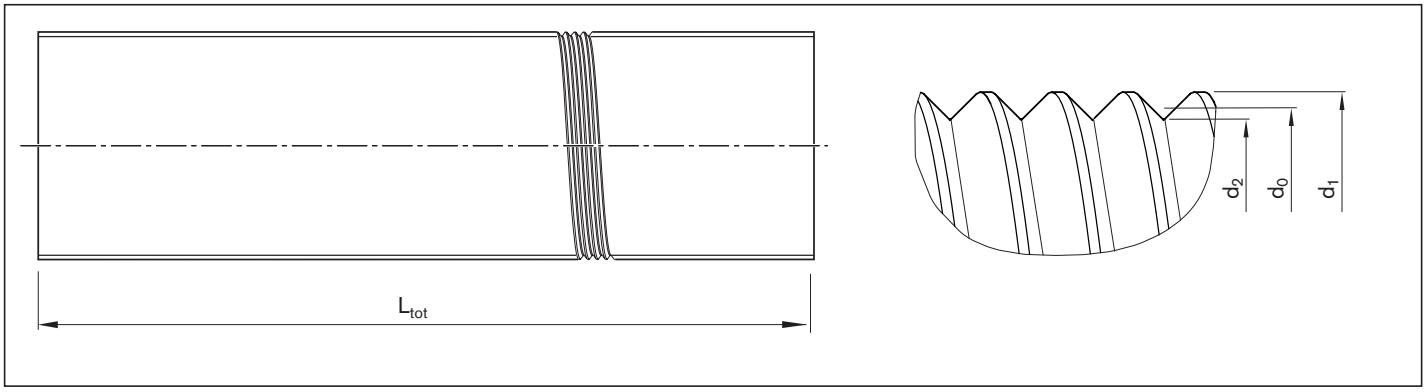

d_0 x P	(mm)					Mass
			Length		J_S	m
	d_1	d_2	Standard	on request	(kgcm²/m)	(kg/m)
20 x 5R	20.3	19.5	1,500	2,500	1.22	2.45
25 x 5R	25.3	24.1	3,000	5,000	2.99	3.85
25 x 10R	25.6	24.0			2.96	3.82
30 x 5R	30.3	29.5			6.21	5.54
30 x 10R	30.5	29.1			6.15	5.51
39 x 5R	39.3	38.5			17.64	9.36
39 x 10R	39.5	38.1			17.64	9.33
48 x 5R	48.3	47.5			40.88	14.21
48 x 10R	48.5	47.1			40.62	14.16
60 x 10R	60.5	59.1			99.38	22.15
60 x 20R	61.1	58.1			98.38	22.03
75 x 10R	75.5	74.1			243.37	34.67
75 x 20R	76.1	73.1			241.32	34.51

Precision screws PSR, with mechanically connected screw ends

These screws consist of
- a precision screw part and
- an unmachined spigot (as the screw journal).

The spigot is mechanically connected on one side and is available in different sizes.

To prevent problems arising when using big end bearing journals (for example, visible thread grooves or axial contact faces that are too small for the fixed bearing), we offer appropriate solutions.
Please consult us.

Separate delivery of a screw without end machining and without nut is not planned.

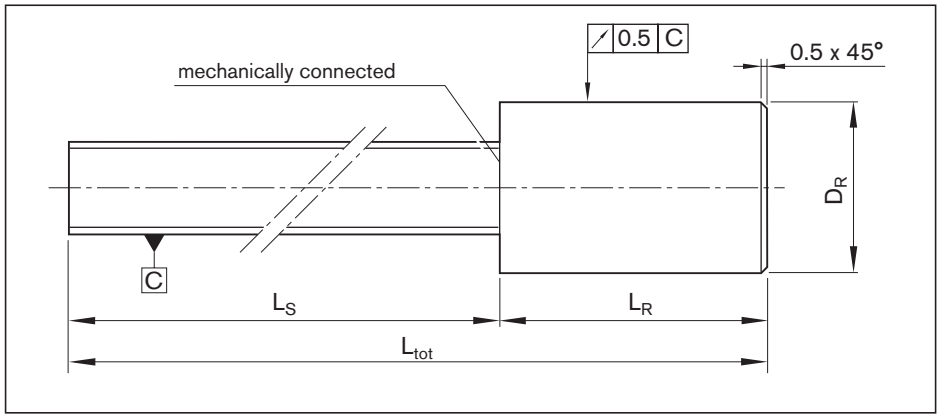

d_0 x P (mm)	Tolerance grade	(mm)			
		D_R −1	L_R +2	L_{tot}	L_S
20 x 5R	T5	36.40	200	1,700	1,500
25 x 5R/10R		36.40	200	1,700	1,500
30 x 5R/10R		46.10	250	2,050	1,800
39 x 5R/10R		76.25	400	2,300	1,900
48 x 5R/10R		80.40	400	2,300	1,900
60 x 10R/20R		98.30	600	3,500	2,900
75 x 10R/20R		110.40	600	3,500	2,900

Overview of screw ends:

Screw ends, forms for a left or right screw end

Basic version			with keyway		
002	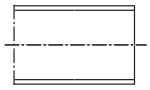	Page 207			
112	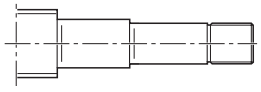	Page 208	122	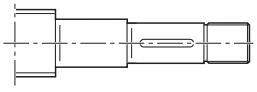	Page 208
132	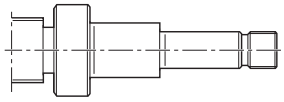	Page 210	142	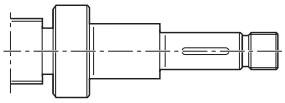	Page 210
212	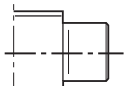	Page 212	222	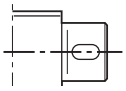	Page 212
312	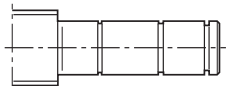	Page 214			
412	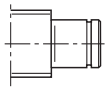	Page 216			
512	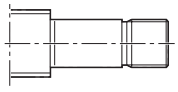	page 218	522	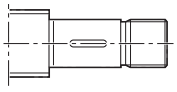	page 218
532	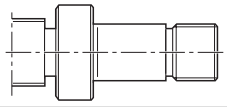	page 220	542	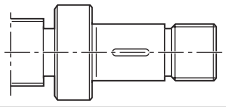	page 220
612	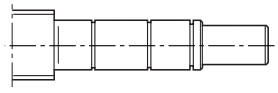	page 222	622	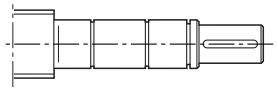	page 222
712	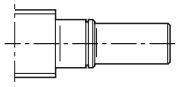	page 224	722	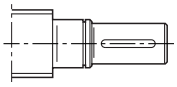	page 224
812	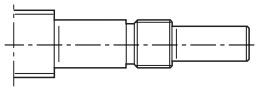	Page 226	822	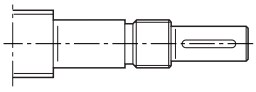	Page 226
832	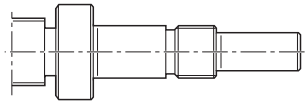	Page 228	842	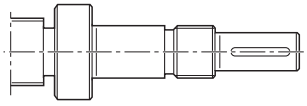	Page 228
912	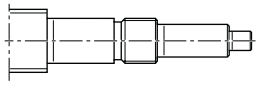	page 230	922	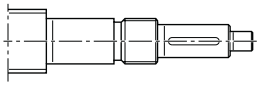	page 230
932	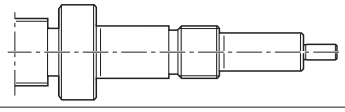	page 232	942	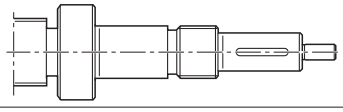	page 232

Abbreviations

C	=	dynamic load rating
C_0	=	static load rating
d_0 x P	=	size
d_0	=	nominal diameter
F_{aB}	=	axial breaking load of slotted nut
G	=	female thread
n_G	=	limit speed (grease)
No.	=	part number
M_A	=	tightening torque of slotted nut
M_{AG}	=	tightening torque of set screw
M_{RL}	=	bearing friction torque with seal
M_p	=	maximum permissible drive torque (condition: no radial load at drive journal)
R_{fb}	=	rigidity (axial)
R_{kl}	=	rigidity against tilting
P	=	lead (R = right-hand)
S	=	hex socket
Z	=	centering hole

Form 002

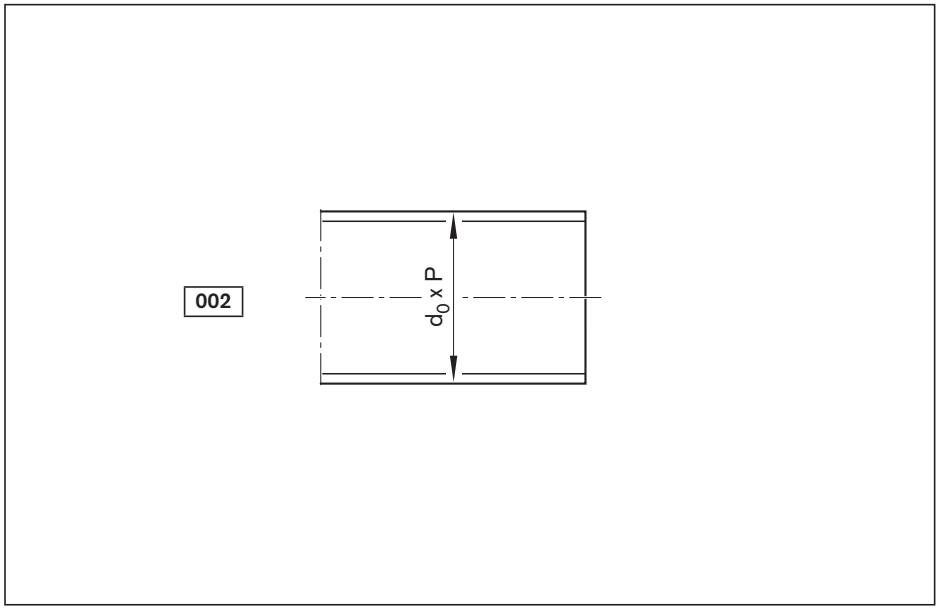

Option (machining of end face)	
K	None
Z	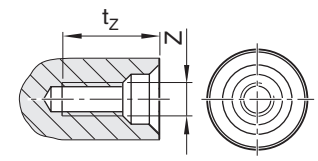
S	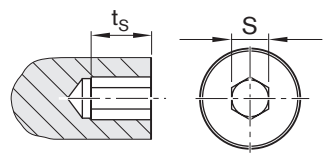
G	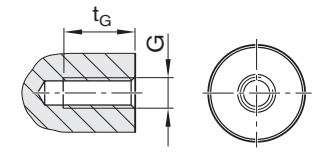

Ordering data:

PLSA	20 x 5R	FEM-E-S	00	1	0	T7	R	002K200	822K150	1250	1	1

Form	Version	Size	(mm)					
		d_0 x P	Z	t_Z	S	t_S	G	t_G
002	**200**	**20 x 5**	M6	16.0	8	8	M6	9
	250	**25 x 5/10**	M8	19.0	10	10	M8	12
	300	**30 x 5/10**	M10	22.0	12	12	M10	15
	390	**39 x 5/10**	M12	28.0	14	14	M12	18
	480	**48 x 5/10**	M16	36.0	17	17	M16	24
	600	**60 x 10/20**	M20	42.0	17	17	M20	30
	750	**75 x 10/20**	M20	42.0	19	19	M24	36

Form 112, 122

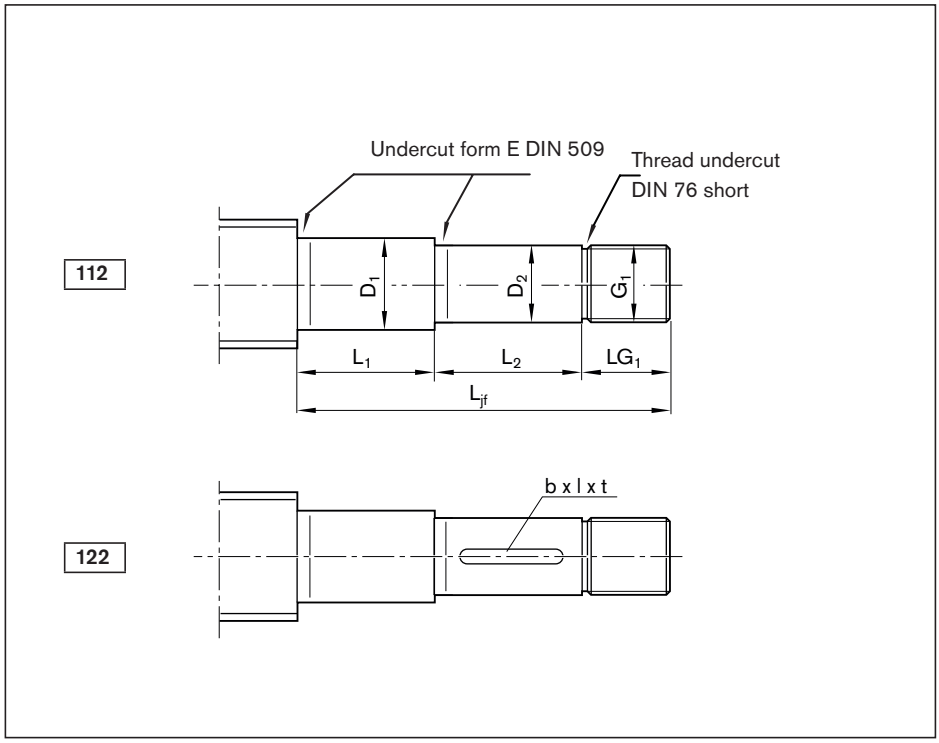

Option (machining of end face)	
K	None
Z	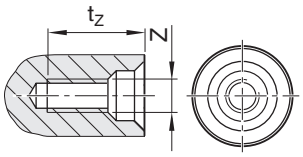
S	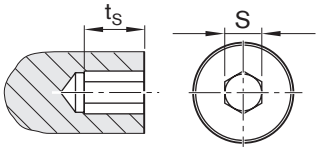
G	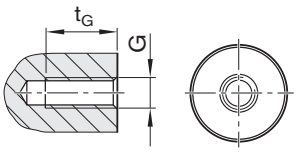

Ordering data:

PLSA	20 x 5R	FEM-E-S	00	1	0	T7	R	122Z151	412K120	1250	1	1

Form	Version[1]	Size	(mm)															
										DIN 6885[2] keyway								
		d_0 x P	L_{jf}	D_1 h6	L_1	D_2 h7	L_2	G_1	LG_1	b P9	l	t	Z	t_Z	S	t_S	G	t_G
112	**150**	**20x5**	60	15	23	12	25	M12x1	12	4	20	2.5	M4	10.0	4	4	M5	8
122[2]	**151**	**20x5**	87	15	50	12	25	M12x1	12	4	20	2.5	M4	10.0	4	4	M5	8
	170	**25x5/10**	100	17	48	15	30	M15x1	22	5	25	3,0	M5	12,5	4	4	M6	9
	171	**25x5/10**	106	17	54	15	30	M15x1	22	5	25	3.0	M5	12.5	4	4	M6	9
	200	**30x5/10**	116	20	54	18	40	M17x1	22	6	28	3.5	M6	16.0	5	5	M6	9
	201	**30x5/10**	120	20	58	18	40	M17x1	22	6	28	3.5	M6	16.0	5	5	M6	9
	300	**39x5/10**	130	30	54	28	50	M25x1.5	26	8	36	4.0	M10	22.0	8	8	M10	15
	301	**39x5/10**	150	30	74	28	50	M25x1.5	26	8	36	4.0	M10	22.0	8	8	M10	15
	350	**48x5/10**	152	35	66	32	60	M30x1.5	26	10	40	5.0	M10	22.0	10	10	M12	18
	351	**48x5/10**	168	35	82	32	60	M30x1.5	26	10	40	5.0	M10	22.0	10	10	M12	18
	450	**60x10/20**	186	45	98	42	60	M40x1.5	28	12	50	5.0	M16	36.0	12	12	M16	24
	600	**75x10/20**	234	60	122	58	80	M50x1.5	32	16	63	6.0	M16	36.0	17	17	M20	30

1) The allocation of screw ends to the bearing assemblies is clearly defined by the version.
2) Keyway with form 122 only
3) Under preparation

For the codes, see the chapter entitled “Abbreviations”

End bearings for screw ends form 112, 122

The bearing assemblies LAF, LAN, LAS consist of:
- 1 bearing
- 1 slotted nut

LAF

LAN

Application

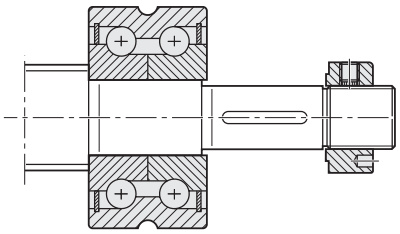

Separate technical dimensioning of the permissible drive torque is absolutely necessary.

LAS

NMZ

	Version[1)]	Bearing assembly		
		LAF Part number	LAN Part number	LAS Part number
	150	R159A 015 01	R159A 115 01	–
	151	–	–	R159A 415 01
	170	[3)]	[3)]	–
	171	–	–	R159A 417 02
	200	R159A 320 01	R159A 220 01	–
	201	–	–	R159A 420 02
	300	R1590 330 30	R1590 230 30	–
	301	–	–	R159A 430 01
	350	R159A 335 01	R159A 235 01	–
	351	–	–	R159A 435 01
	450	–	–	R159A 445 01
	600	–	–	R159A 460 01

Form 132, 142

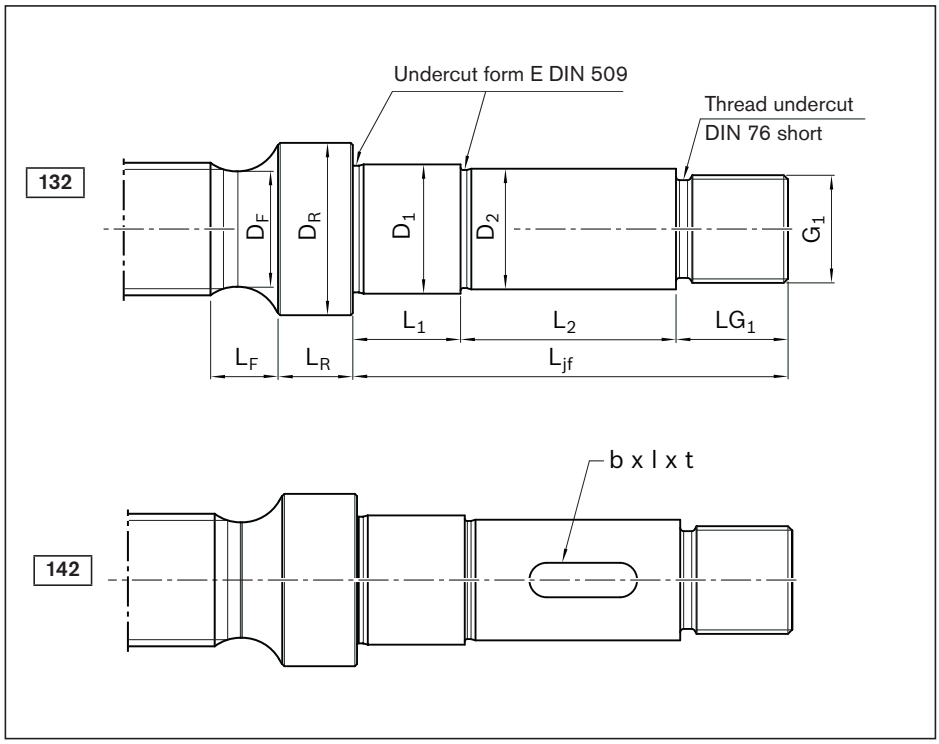

Option (machining of end face)	
K	None
Z	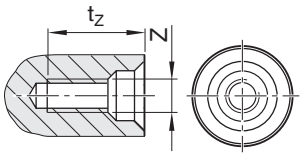
S	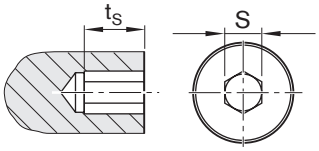
G	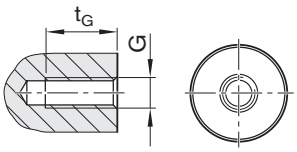

Ordering data:

PLSA	20 x 5R	FEM-E-S	00	1	0	T7	R	142Z250	312Z120	1250	1	1

Form	Version[1]	Size	(mm)										
		d_0 x P	L_{jf}	D_1 h6	L_1	D_2 h7	L_2	G_1	LG_1	D_R	L_R	D_F	L_F
132	200	20x5	116	20	54	18	40	M17x1	22	27	7	19.2	14.0
142[2]	250	20x5	159	25	87	22	50	M20x1	22	34	7	19.2	26.0
	251	25x5	138	25	66	22	50	M20x1	22	34	7	24.2	14.0
	252	25x10	138	25	66	22	50	M20x1	22	34	7	23.7	14.0
	253	25x5	159	25	87	22	50	M20x1	22	34	7	24.2	14.0
	254	25x10	159	25	87	22	50	M20x1	22	34	7	23.7	14.0
	300	30x5	150	30	74	28	50	M25x1.5	26	40	10	29.2	17.0
	301	30x10	150	30	74	28	50	M25x1.5	26	40	10	28.7	17.0
	350	30x5	194	35	108	32	60	M30x1.5	26	45	10	29.2	28.0
	351	30x10	194	35	108	32	60	M30x1.5	26	45	10	28.7	28.0
	400	39x5	178	40	90	38	60	M35x1.5	28	54	12	38.1	24.5
	401	39x10	178	40	90	38	60	M35x1.5	28	54	12	37.7	24.5
	500	39x5	245	50	137	48	80	M40x1.5	28	62	12	38.1	32.0
	501	39x10	245	50	137	48	80	M40x1.5	28	62	12	37.7	32.0
	502	48x5	214	50	106	48	80	M40x1.5	28	62	12	47.2	22.0
	503	48x10	214	50	106	48	80	M40x1.5	28	62	12	46.7	22.0
	650	48x5	312	65	178	62	100	M60x2	34	78	18	47.2	46.0
	651	48x10	312	65	178	62	100	M60x2	34	78	18	46.7	46.0
	700	60x10	272	70	138	68	100	M65x2	34	90	20	58.7	50.0
	701	60x20	272	70	138	68	100	M65x2	34	90	20	57.7	50.0
	652	60x10	312	65	178	62	100	M60x2	34	78	18	58.7	39.0
	653	60x20	312	65	178	62	100	M60x2	34	78	18	57.7	39.0
	900	75x10	327	90	169	88	120	M85x2	38	108	25	73.7	59.0
	901	75x20	327	90	169	88	120	M85x2	38	108	25	72.7	59.0
	902	75x10	391	90	233	88	120	M85x2	38	108	25	73.7	59.0
	903	75x20	391	90	233	88	120	M85x2	38	108	25	72.7	59.0

1) The allocation of screw ends to the bearing assemblies is clearly defined by the version.
2) Keyway with form 142 only

For the codes, see the chapter entitled “Abbreviations”

End bearings for screw ends form 132, 142

The bearing assemblies LAS, FEC-F consist of:
- 1 bearing
- 1 slotted nut

Application

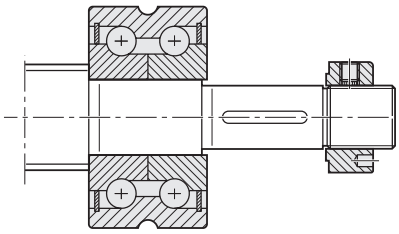

Separate technical dimensioning of the permissible drive torque is absolutely necessary.

LAS

FEC-F

										Bearing assembly	
Version[1)]	DIN 6885[2)] keyway			Centering hole		Hex socket		Thread			
	b P9	l	t	Z	t_Z	S	t_S	G	t_G	LAS Part number	FEC-F Part number
200	6	36	3.5	M6	16	5	5	M6	9	R159A 420 01	–
250	6	40	3.5	M6	16	5	5	M8	12	–	R159B 425 01
251	6	40	3.5	M6	16	5	5	M8	12	R159A 425 01	–
252	6	40	3.5	M6	16	5	5	M8	12	R159A 425 01	–
253	6	40	3.5	M6	16	5	5	M8	12	–	R159B 425 01
254	6	40	3.5	M6	16	5	5	M8	12	–	R159B 425 01
300	8	40	4.0	M10	22	8	8	M10	15	R159A 430 01	–
301	8	40	4.0	M10	22	8	8	M10	15	R159A 430 01	–
350	10	45	5.0	M10	22	10	10	M12	18	–	R159B 435 01
351	10	45	5.0	M10	22	10	10	M12	18	–	R159B 435 01
400	10	50	5.0	M12	28	12	12	M12	18	R159A 440 01	–
401	10	50	5.0	M12	28	12	12	M12	18	R159A 440 01	–
500	14	50	5.5	M16	36	12	12	M16	24	–	R159B 450 01
501	14	50	5.5	M16	36	12	12	M16	24	–	R159B 450 01
502	14	50	5.5	M16	36	12	12	M16	24	R159A 450 01	–
503	14	50	5.5	M16	36	12	12	M16	24	R159A 450 01	–
650	18	90	7.0	M20	42	19	19	M24	36	–	R159B 465 01
651	18	90	7.0	M20	42	19	19	M24	36	–	R159B 465 01
700	20	90	7.5	M20	42	19	19	M24	36	R159A 470 01	–
701	20	90	7.5	M20	42	19	19	M24	36	R159A 470 01	–
652	18	90	7.0	M20	42	19	19	M24	36	–	R159B 465 01
653	18	90	7.0	M20	42	19	19	M24	36	–	R159B 465 01
900	25	100	9.0	M20	42	19	19	M30	45	R159A 490 01	–
901	25	100	9.0	M20	42	19	19	M30	45	R159A 490 01	–
902	25	100	9.0	M20	42	19	19	M30	45	–	R159B 490 01
903	25	100	9.0	M20	42	19	19	M30	45	–	R159B 490 01

Form 212, 222

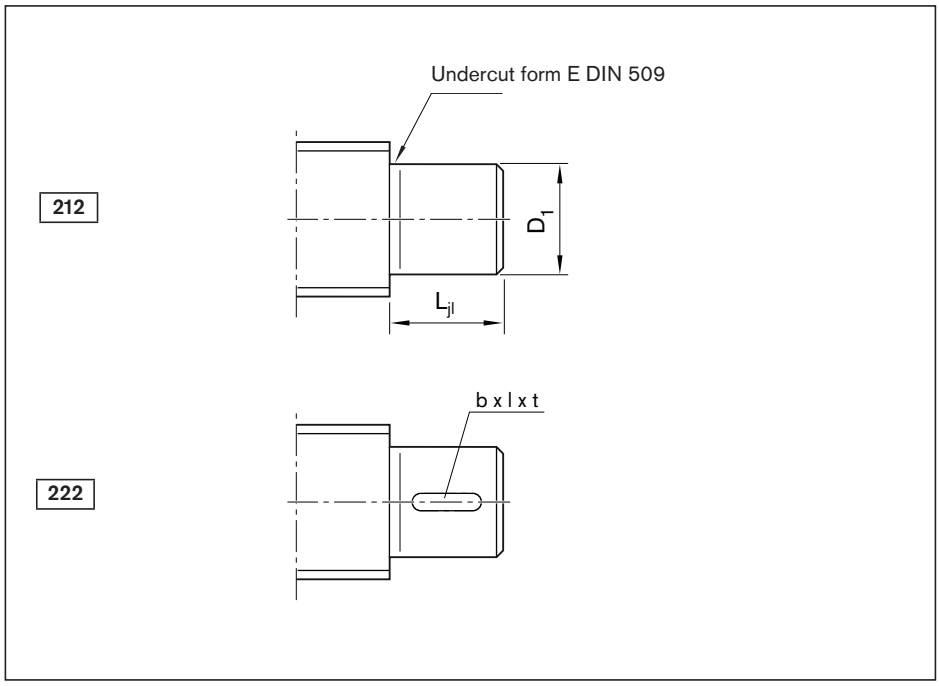

Option (machining of end face)	
K	None
Z	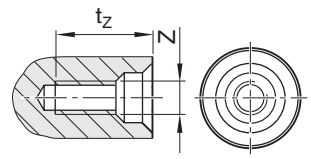
S	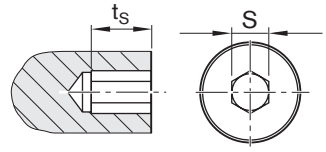
G	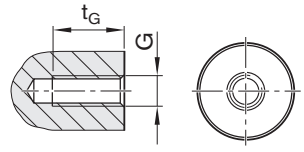

Ordering data:

PLSA	20 x 5R	FEM-E-S	00	1	0	T7	R	222Z150	412Z120	1250	1	1

Form	Version[1]	Size	(mm)											Deep-groove ball bearing as per DIN 625[3]	
			L_{jl}	D_1	DIN 6885[2] keyway			Centering hole		Hex socket		Thread			
		d_0 x P		j6	b P9	l	t	Z	t_Z	S	t_S	G	t_G	Designation	Bearing assembly LAD Part number
212	120	20 x 5	13	12	4	8	2.5	M4	10.0	4	4	M5	8	6201.2RS	R3414 042 00
222[2]	150	20 x 5	15	15	5	10	3.0	M5	12.5	4	4	M6	9	6202.2RS	R3414 074 00
	170	25 x 5/10	15	17	5	10	3.0	M6	16.0	5	5	M6	9	6203.2RS	R3414 050 00
	200	30 x 5/10	24	20	6	14	3.5	M6	16.0	5	5	M8	12	6204.2RS	R3414 038 00
	250	30 x 5/10	28	25	8	18	4.0	M10	22.0	8	8	M10	15	6205.2RS	R3414 063 00
	300	39 x 5/10	28	30	8	18	4.0	M10	22.0	10	10	M12	18	6206.2RS	R3414 051 00
	350	48 x 5/10	32	35	10	22	5.0	M12	28.0	12	12	M12	18	6207.2RS	R3414 075 00
	500	60 x 10/20	46	50	14	36	5.5	M16	36.0	19	19	M20	30	6210.2RS	R3414 077 00
	600	75 x 10/20	60	60	18	50	7.0	M20	42.0	19	19	M24	36	6212.2RS	R3414 078 00

1) The allocation of screw ends to the bearing assemblies is clearly defined by the version.
2) Keyway with form 222 only
3) Deep groove ball bearing with form 212 only
4) Scope of delivery: 1 bearing, 2 retaining rings.

For the codes, see the chapter entitled “Abbreviations”

End bearings for screw ends in form 212

Application

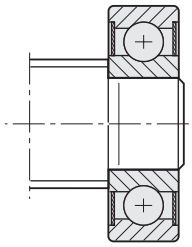

Bearing assembly LAD[2)]

Form 312

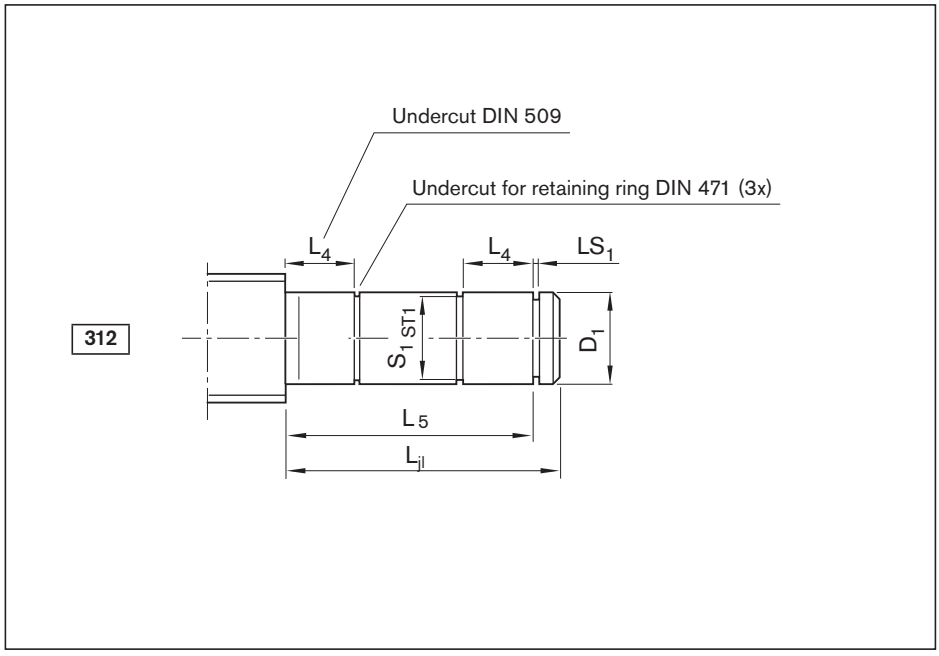

Option (machining of end face)	
K	None
Z	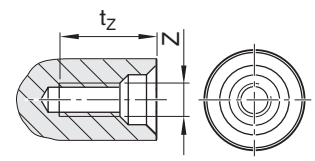
S	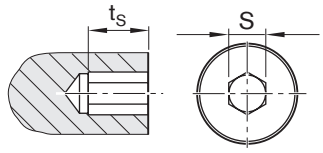
G	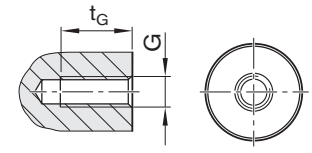

Ordering data:

PLSA	20 x 5R	FEM-E-S	00	1	0	T7	R	312Z120	822K150	1250	1	1

Form	Version[1)]	Size	(mm)													Bearing assembly LAD
										Centering hole		Hex socket		Thread		
		d_0 x P	D_1 j6	L_{jl}	L_4	L_5	S_1	ST1	LS_1 H13	Z	t_Z	S	t_S	G	t_G	Part number
312	**120**	**20 x 5**	12	43	10	40	11.5	h11	1.10	M4	10.0	4	4	M5	8	R1590 612 00
	150	**20 x 5**	15	47	11	44	14.3	h11	1.10	M5	12.5	4	4	M6	9	R1590 615 00
	170	**25 x 5/10**	17	51	12	48	16.2	h11	1.10	M6	16.0	5	5	M6	9	R1590 617 00
	200	**30 x 5/10**	20	60	14	56	19.0	h11	1.30	M6	16.0	5	5	M8	12	R1590 620 00
	250	**30 x 5/10**	25	64	15	60	23.9	h12	1.30	M10	22.0	8	8	M10	15	R1590 625 00
	300	**39 x 5/10**	30	68	16	64	28.6	h12	1.60	M10	22.0	10	10	M12	18	R1590 630 00
	350	**48 x 5/10**	35	73	17	68	33.0	h12	1.60	M12	28.0	12	12	M12	18	R1590 635 00
	500	**60 x 10/20**	50	87	20	80	47.0	h12	2.15	M16	36.0	19	19	M20	30	R1590 650 00
	600	**75 x 10/20**	60	95	22	88	57.0	h12	2.15	M20	42.0	19	19	M24	36	R1590 660 00

1) The allocation of screw ends to the bearing assemblies is clearly defined by the version.
Note: Form 312 with two floating bearings increases the critical speed, see “Critical speed n_{cr}” on page 270.

For the codes, see the chapter entitled “Abbreviations”

End bearings for screw ends in form 312

The bearing assembly LAD consists of:
- 1 bearing (2x required)
- 2 retaining rings

Application

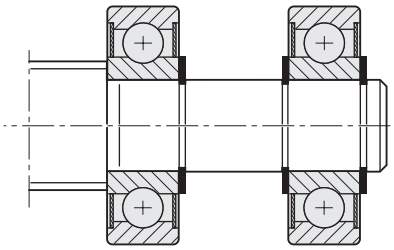

Form 412

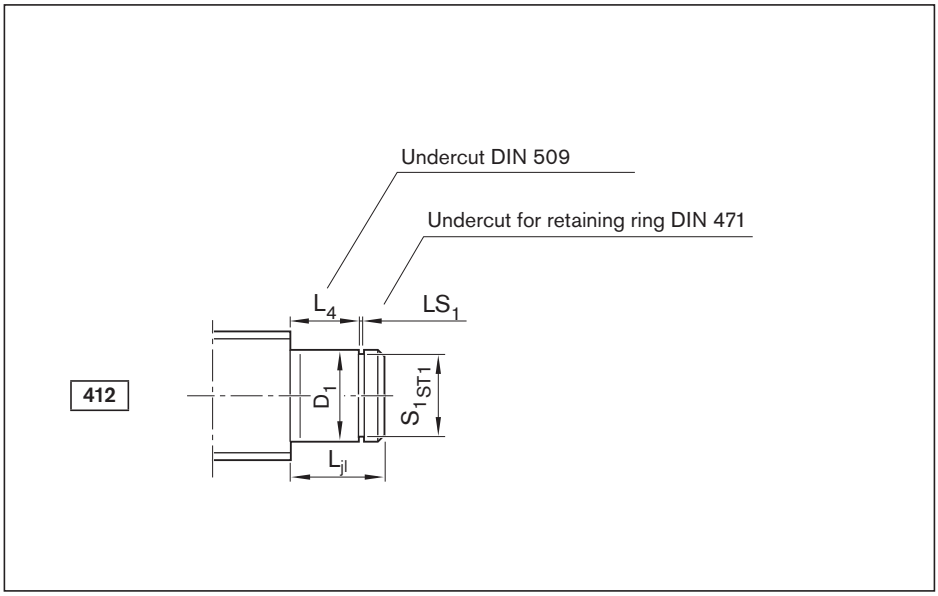

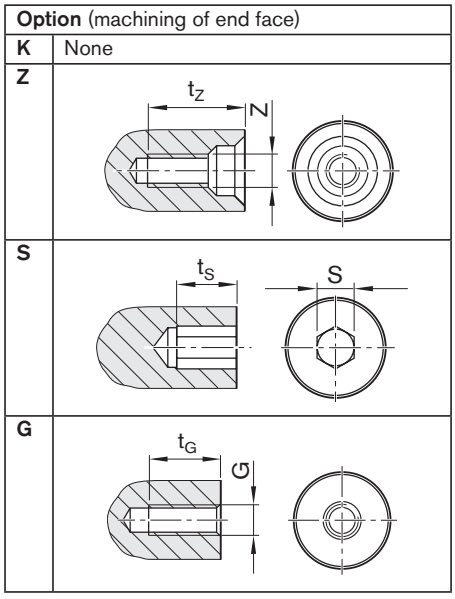

Ordering data:

PLSA	20 x 5R	FEM-E-S	00	1	0	T7	R	412Z120	822K150	1250	1	1

Form	Version[1]	Size	(mm)												Bearing assembly LAD
									Centering hole		Hex socket		Thread		
		d_0 x P	D_1 j6	L_{jl}	L_4	S_1	ST1	LS_1 H13	Z	t_Z	S	t_S	G	t_G	Part number
412	**120**	**20 x 5**	12	13	10	11.5	h11	1.10	M4	10.0	4	4	M5	8	R1590 612 00
	150	**20 x 5**	15	14	11	14.3	h11	1.10	M5	12.5	4	4	M6	9	R1590 615 00
	170	**25 x 5/10**	17	15	12	16,2	h11	1,10	M6	16,0	5	5	M6	9	R1590 617 00
	200	**30 x 5/10**	20	18	14	19.0	h11	1.30	M6	16.0	5	5	M8	12	R1590 620 00
	250	**30 x 5/10**	25	19	15	23.9	h12	1.30	M10	22.0	8	8	M10	15	R1590 625 00
	300	**39 x 5/10**	30	20	16	28.6	h12	1.60	M10	22.0	10	10	M12	18	R1590 630 00
	350	**48 x 5/10**	35	22	17	33.0	h12	1.60	M12	28.0	12	12	M12	18	R1590 635 00
	500	**60 x 10/20**	50	27	20	47.0	h12	2.15	M16	36.0	19	19	M20	30	R1590 650 00
	600	**75 x 10/20**	60	29	22	57.0	h12	2.15	M20	42.0	19	19	M24	36	R1590 660 00

1) The allocation of screw ends to the bearing assemblies is clearly defined by the version.

For the codes, see the chapter entitled “Abbreviations”

End bearings for screw ends in form 412

The bearing assembly LAD consists of:
- 1 bearing
- 2 retaining rings

Application

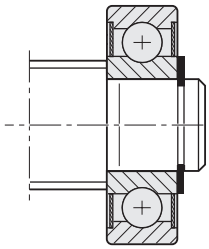

Form 512, 522

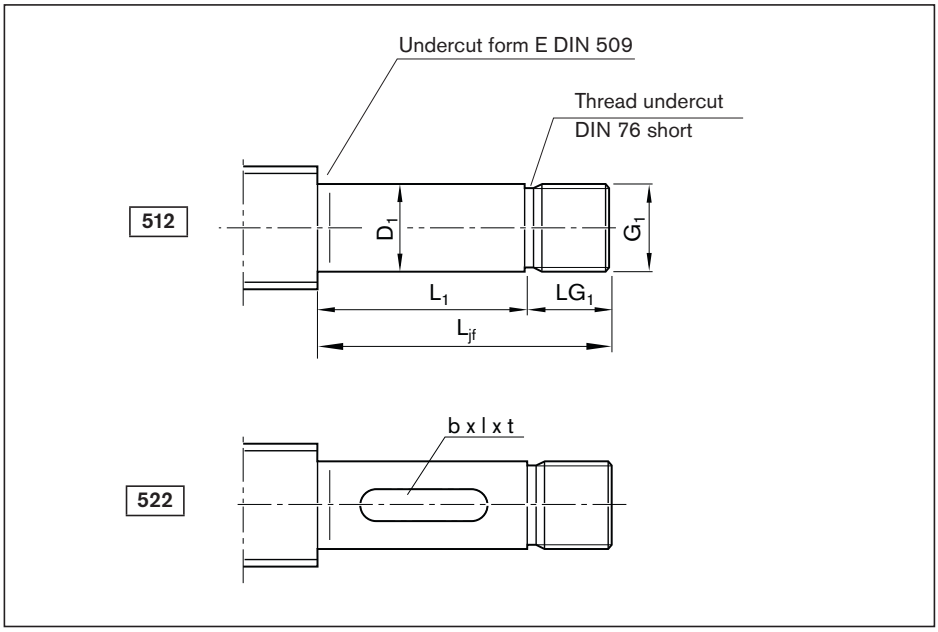

Option (machining of end face)	
K	None
Z	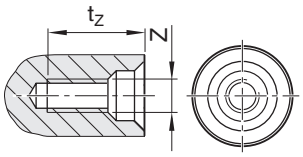
S	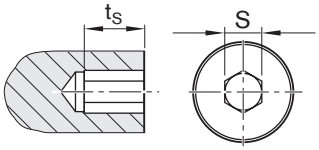
G	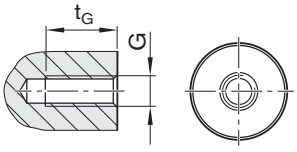

Ordering data:

PLSA	20 x 5R	FEM-E-S	00	1	0	T7	R	512Z150	312Z120	1250	1	1

Form	Version[1]	Size	(mm)													
								DIN 6885[2] keyway			Centering hole		Hex socket		Thread	
		d_0 x P	L_{jf} h6	D_1	L_1	G_1	LG_1	b P9	l	t	Z	t_Z	S	t_S	G	t_G
512/ 522[2]	**150**	**20 x 5**	45	15	23	M15X1	22	5	14	3.0	M5	12.5	4	4	M6	9
	151	**20 x 5**	72	15	50	M15x1	22	5	25	3.0	M5	12.5	4	4	M6	9
	170	**25 x 5**	70	17	48	M17x1	22	5	25	3.0	M6	16.0	5	5	M6	9
		25 x 10	70	17	48	M17x1	22	5	25	3.0	M6	16.0	5	5	M6	9
	171	**25 x 5**	76	17	54	M17x1	22	5	25	3.0	M6	16.0	5	5	M6	9
		25 x 10	76	17	54	M17x1	22	5	25	3.0	M6	16.0	5	5	M6	9
	200	**30 x 5**	76	20	54	M20x1	22	6	28	3.5	M6	16.0	5	5	M8	12
		30 x 10	76	20	54	M20x1	22	6	28	3.5	M6	16.0	5	5	M8	12
	201	**30 x 5**	80	20	58	M20x1	22	6	28	3.5	M6	16.0	5	5	M8	12
		30 x 10	80	20	58	M20x1	22	6	28	3.5	M6	16.0	5	5	M8	12
	300	**39 x 5**	80	30	54	M30x1.5	26	8	36	4.0	M10	22.0	10	10	M12	18
		39 x 10	80	30	54	M30x1.5	26	8	36	4.0	M10	22.0	10	10	M12	18
	301	**39 x 5**	100	30	74	M30x1.5	26	8	36	4.0	M10	22.0	10	10	M12	18
		39 x 10	100	30	74	M30x1.5	26	8	36	4.0	M10	22.0	10	10	M12	18
	350	**48 x 5**	94	35	66	M35x1.5	28	10	40	5.0	M12	28.0	12	12	M12	18
		48 x 10	94	35	66	M35x1.5	28	10	40	5.0	M12	28.0	12	12	M12	18
	351	**48 x 5**	110	35	82	M35x1.5	28	10	40	5.0	M12	28.0	12	12	M12	18
		48 x 10	110	35	82	M35x1.5	28	10	40	5.0	M12	28.0	12	12	M12	18
	450	**60 x 10**	126	45	98	M45x1.5	28	14	63	5.5	M16	36.0	14	14	M16	24
		60 x 20	126	45	98	M45x1.5	28	14	63	5.5	M16	36.0	14	14	M16	24
	600	**75 x 10**	156	60	122	M60x2	34	18	80	7.0	M20	42.0	19	19	M24	36
		75 x 20	156	60	122	M60x2	34	18	80	7.0	M20	42.0	19	19	M24	36

1) The allocation of screw ends to the bearing assemblies is clearly defined by the version.
2) Keyway with form 522 only
3) Under preparation

For the codes, see the chapter entitled “Abbreviations”

End bearings for screw ends in form 512

The bearing assemblies LAF, LAN, LAS consist of:
- 1 bearing
- 1 slotted nut

LAF

LAN

Application

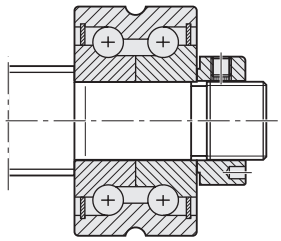

LAS

Version[1)]	Size d_0 x P	M_p (Nm) (For form 512 only)	Bearing assembly LAF Part number	LAN Part number	LAS Part number
150	**20 x 5**	12.1	R159A 015 01	R159A 115 01	–
151	**20 x 5**	12.1	–	–	R159A 415 01
170	**25 x 5**	16.0	[3)]	[3)]	–
	25 x 10	28.8	[3)]	[3)]	–
171	**25 x 5**	16.0	–	–	R159A 417 02
	25 x 10	25.8	–	–	R159A 417 02
200	**30 x 5**	22.6	R159A 320 01	R159A 220 01	–
	30 x 10	38.8	R159A 320 01	R159A 220 01	–
201	**30 x 5**	22.6	–	–	R159A 420 02
	30 x 10	38.8	–	–	R159A 420 02
300	**39 x 5**	46.1	R1590 330 30	R1590 230 30	–
	39 x 10	86.4	R1590 330 30	R1590 230 30	–
301	**39 x 5**	46.1	–	–	R159A 430 01
	39 x 10	86.4	–	–	R159A 430 01
350	**48 x 5**	62.7	R159A 335 01	R159A 235 01	–
	48 x 10	120.4	R159A 335 01	R159A 235 01	–
351	**48 x 5**	62.7	–	–	R159A 435 01
	48 x 10	120.4	–	–	R159A 435 01
450	**60 x 10**	194.3	–	–	R159A 445 01
	60 x 20	359.7	–	–	R159A 445 01
600	**75 x 10**	324.8	–	–	R159A 460 01
	75 x 20	624.2	–	–	R159A 460 01

Form 532, 542

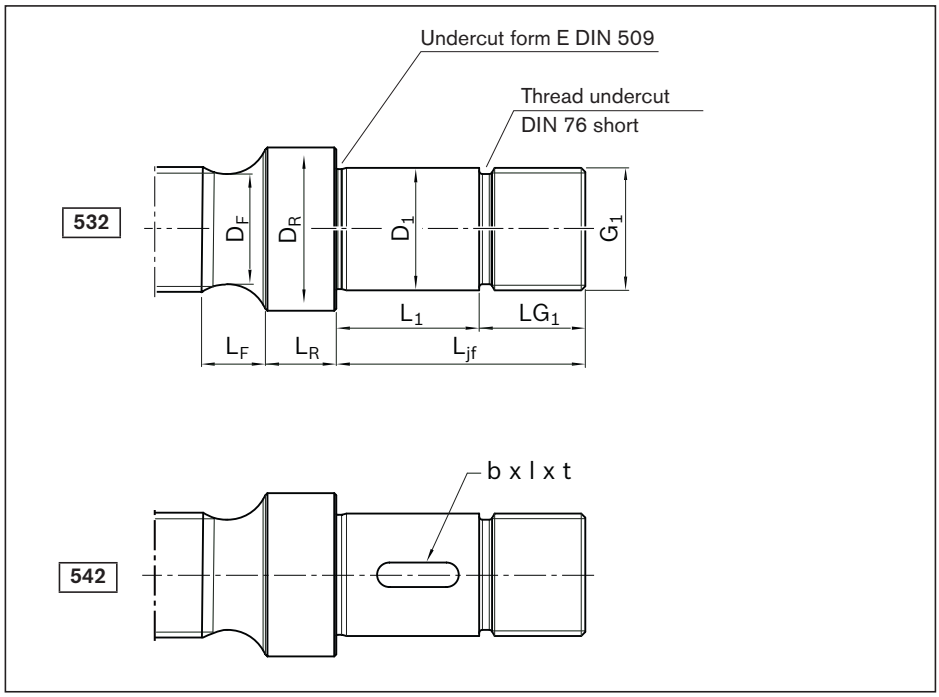

Option (machining of end face)	
K	None
Z	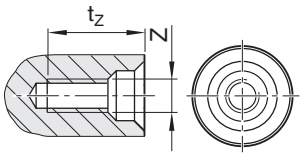
S	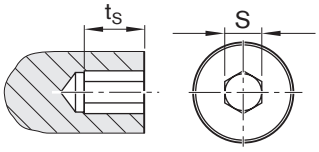
G	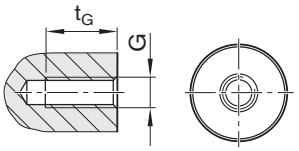

Ordering data:

PLSA	20 x 5R	FEM-E-S	00	1	0	T7	R	532Z200	412Z120	1250	1	1

Form	Version[1]	Size	(mm)									DIN 6885[2] keyway		
		d_0 x P	L_{jf}	D_1 h6	L_1	G_1	LG_1	D_R	L_R	D_F	L_F	b P9	l	t
532	**200**	**20 x 5**	76	20	54	M20x1	22	27	7	19.2	14.0	6	36	3.5
542[2]	**250**	**20 x 5**	113	25	87	M25x1.5	26	34	7	19.2	26.0	8	40	4.0
	252	**25 x 5**	92	25	66	M25x1.5	26	34	7	24.2	14.0	8	40	4.0
	253	**25 x 10**	92	25	66	M25x1.5	26	34	7	23.7	14.0	8	40	4.0
	254	**25 x 5**	113	25	87	M25x1.5	26	34	7	24.2	14.0	8	40	4.0
	255	**25 x 10**	113	25	87	M25x1.5	26	34	7	23.7	14.0	8	40	4.0
	300	**30 x 5**	100	30	74	M30x1.5	26	40	10	29.2	17.0	8	40	4.0
	301	**30 x 10**	100	30	74	M30x1.5	26	40	10	28.7	17.0	8	40	4.0
	350	**30 x 5**	136	35	108	M35x1.5	28	45	10	29.2	28.0	10	45	5.0
	351	**30 x 10**	136	35	108	M35x1.5	28	45	10	28.7	28.0	10	45	5.0
	400	**39 x 5**	118	40	90	M40x1.5	28	54	12	38.1	24.5	12	50	5.0
	401	**39 x 10**	118	40	90	M40x1.5	28	54	12	37.7	24.5	12	50	5.0
	500	**39 x 5**	169	50	137	M50x1.5	32	62	12	38.1	32.0	14	50	5.5
	501	**39 x 10**	169	50	137	M50x1.5	32	62	12	37.7	32.0	14	50	5.5
	502	**48 x 5**	138	50	106	M50x1.5	32	62	12	47.2	22.0	14	50	5.5
	503	**48 x 10**	138	50	106	M50x1.5	32	62	12	46.7	22.0	14	50	5.5
	650	**48 x 5**	212	65	178	M65x2	34	78	18	47.2	46.0	18	90	7.0
	651	**48 x 10**	212	65	178	M65x2	34	78	18	46.7	46.0	18	90	7.0
	700	**60 x 10**	174	70	138	M70x2	36	90	20	58.7	50.0	20	90	7.5
	701	**60 x 20**	174	70	138	M70x2	36	90	20	57.7	50.0	20	90	7.5
	652	**60 x 10**	212	65	178	M65x2	34	78	18	58.7	39.0	18	90	7.0
	653	**60 x 20**	212	65	178	M65x2	34	78	18	57.7	39.0	18	90	7.0
	900	**75 x 10**	209	90	169	M90x2	40	108	25	73.7	59.0	25	100	9.0
	901	**75 x 20**	209	90	169	M90x2	40	108	25	72.7	59.0	25	100	9.0
	902	**75 x 10**	273	90	233	M90x2	40	108	25	73.7	59.0	25	100	9.0
	903	**75 x 20**	273	90	233	M90x2	40	108	25	72.7	59.0	25	100	9.0

1) The allocation of screw ends to the bearing assemblies is clearly defined by the version.
2) Keyway with form 542 only

For the codes, see the chapter entitled “Abbreviations”

End bearings for screw ends in form 532

The bearing assemblies FEC-F, LAS consist of:
- 1 bearing
- 1 slotted nut

Application

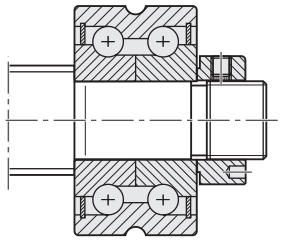

LAS

FEC-F

							Mp (Nm)	Bearing assembly	
Version[1)]	Centering hole		Hex socket		Thread		For form 532 only	LAS	FEC-F
	Z	t_Z	S	t_S	G	t_G		Part number	Part number
200	M6	16	5	5	M6	9	22.9	R159A 420 01	–
250	M6	16	5	5	M8	12	28.6	–	R159B 425 01
252	M10	22	8	8	M10	15	33.3	R159A 425 01	–
253	M10	22	8	8	M10	15	60.5	R159A 425 01	–
254	M10	22	8	8	M10	15	33.3	–	R159B 425 01
255	M10	22	8	8	M10	15	60.5	–	R159B 425 01
300	M10	22	8	8	M10	15	45.8	R159A 430 01	–
301	M10	22	8	8	M10	15	85.9	R159A 430 01	–
350	M10	22	10	10	M12	18	54.3	–	R159B 435 01
351	M10	22	10	10	M12	18	108.6	–	R159B 435 01
400	M12	28	12	12	M12	18	80.2	R159A 440 01	–
401	M12	28	12	12	M12	18	156.0	R159A 440 01	–
500	M16	36	12	12	M16	24	91.1	–	R159B 450 01
501	M16	36	12	12	M16	24	175.4	–	R159B 450 01
502	M16	36	12	12	M16	24	121.3	R159A 450 01	–
503	M16	36	12	12	M16	24	237.3	R159A 450 01	–
650	M20	42	19	19	M24	36	137.4	–	R159B 465 01
651	M20	42	19	19	M24	36	279.9	–	R159B 465 01
700	M20	42	19	19	M24	36	423.8	R159A 470 01	–
701	M20	42	19	19	M24	36	793.8	R159A 470 01	–
652	M20	42	19	19	M24	36	408.1	–	R159B 465 01
653	M20	42	19	19	M24	36	771.4	–	R159B 465 01
900	M20	42	19	19	M30	45	656.2	R159A 490 01	–
901	M20	42	19	19	M30	45	1,250.0	R159A 490 01	–
902	M20	42	19	19	M30	45	656.2	–	R159B 490 01
903	M20	42	19	19	M30	45	1,250.0	–	R159B 490 01

Form 612, 622

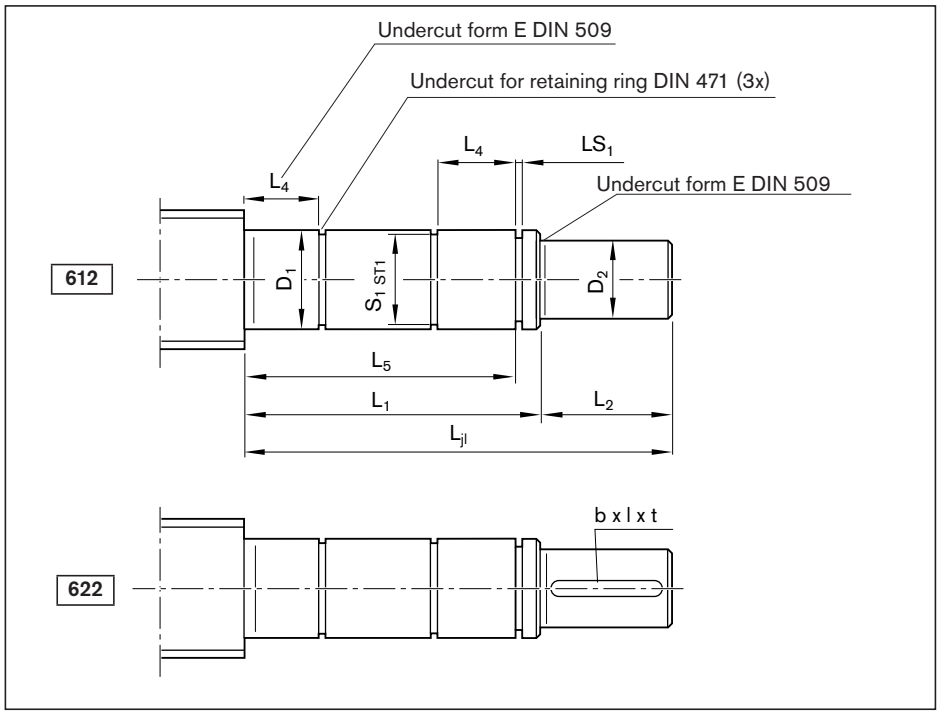

Option (machining of end face)	
K	None
Z	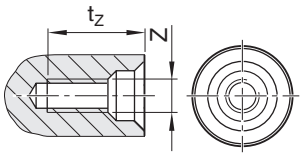
S	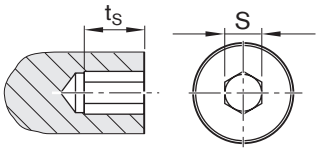
G	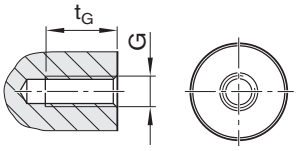

Ordering data:

PLSA	20 x 5R	FEM-E-S	00	1	0	T7	R	622Z150	822K150	1250	1	1

Form	Version[1]	Size	(mm)									
		d_0 x P	L_{jl}	D_1 j6	L_1	D_2 h7	L_2	L_4	L_5	S_1	ST1	LS_1 H13
612	**120**	**20 x 5**	68	12	43	10	25	10	40	11.5	h11	1.10
622[2]	**150**	**20 x 5**	72	15	47	12	25	11	44	14.3	h11	1.10
	170	**25 x 5**	81	17	51	15	30	12	48	16.2	h11	1.10
		25 x 10	81	17	51	15	30	12	48	16.2	h11	1.10
	200	**30 x 5**	100	20	60	18	40	14	56	19.0	h11	1.30
		30 x 10	100	20	60	18	40	14	56	19.0	h11	1.30
	250	**30 x 5**	114	25	64	22	50	15	60	23.9	h12	1.30
		30 x 10	114	25	64	22	50	15	60	23.9	h12	1.30
	300	**39 x 5**	118	30	68	28	50	16	64	28.6	h12	1.60
		39 x 10	118	30	68	28	50	16	64	28.6	h12	1.60
	350	**48 x 5**	133	35	73	32	60	17	68	33.0	h12	1.60
		48 x 10	133	35	73	32	60	17	68	33.0	h12	1.60
	500	**60 x 10**	167	50	87	48	80	20	80	47.0	h12	2.15
		60 x 20	167	50	87	48	80	20	80	47.0	h12	2.15
	600	**75 x 10**	175	60	95	58	80	22	88	57.0	h12	2.15
		75 x 20	175	60	95	58	80	22	88	57.0	h12	2.15

1) The allocation of screw ends to the bearing assemblies is clearly defined by the version.
Note: Form 312 with two floating bearings increases the critical speed, see “Critical speed n_{cr}” on page 270.
2) Keyway with form 622 only
3) Scope of delivery per assembly: 1 bearing, 2 retaining rings. Two assemblies are required for form 612-622.

For the codes, see the chapter entitled “Abbreviations”

End bearings for screw ends form 612, 622

Application

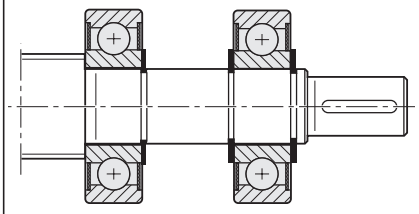

Bearing assembly LAD[3)]

Version[1)]	Size	DIN 6885[2)] keyway			Centering hole		Hex socket		Thread		M_p (Nm) Form		Bearing assembly
	d_0 x P	b	l	t	Z	t_Z	S	t_S	G	t_g	612	622	LAD[3)]
		P9											Part number
120	**20 x 5**	3	20	1.8	M3	9.0	4	4	M4	6.0	16.2	12.8	R1590 612 00
150	**20 x 5**	4	20	2.5	M4	10.0	4	4	M5	8.0	29.1	21.9	R1590 615 00
170	**25 x 5**	5	25	3.0	M5	12.5	4	4	M6	9.0	40.2	40.2	R1590 617 00
	25 x 10	5	25	3.0	M5	12.5	4	4	M6	9.0	40.2	40.2	R1590 617 00
200	**30 x 5**	6	28	3.5	M6	16.0	5	5	M6	9.0	61.4	61.4	R1590 620 00
	30 x 10	6	28	3.5	M6	16.0	5	5	M6	9.0	61.4	61.4	R1590 620 00
250	**30 x 5**	6	36	3.5	M8	19.0	6	6	M8	12.0	118.2	118.2	R1590 625 00
	30 x 10	6	36	3.5	M8	19.0	6	6	M8	12.0	118.3	118.3	R1590 625 00
300	**39 x 5**	8	36	4.0	M10	22.0	10	10	M10	15.0	173.6	173.6	R1590 630 00
	39 x 10	8	36	4.0	M10	22.0	10	10	M10	15.0	173.8	173.8	R1590 630 00
350	**48 x 5**	10	40	5.0	M12	28.0	10	10	M12	18.0	244.6	244.6	R1590 635 00
	48 x 10	10	40	5.0	M12	28.0	10	10	M12	18.0	244.9	244.9	R1590 635 00
500	**60 x 10**	14	63	5.5	M16	36.0	17	17	M16	24.0	669.6	669.6	R1590 650 00
	60 x 20	14	63	5.5	M16	36.0	17	17	M16	24.0	671.1	671.1	R1590 650 00
600	**75 x 10**	16	63	6.0	M20	42.0	19	19	M20	30.0	1,142.4	1,142.4	R1590 660 00
	75 x 20	16	63	6.0	M20	42.0	19	19	M20	30.0	1,144.5	1,144.5	R1590 660 00

Form 712, 722

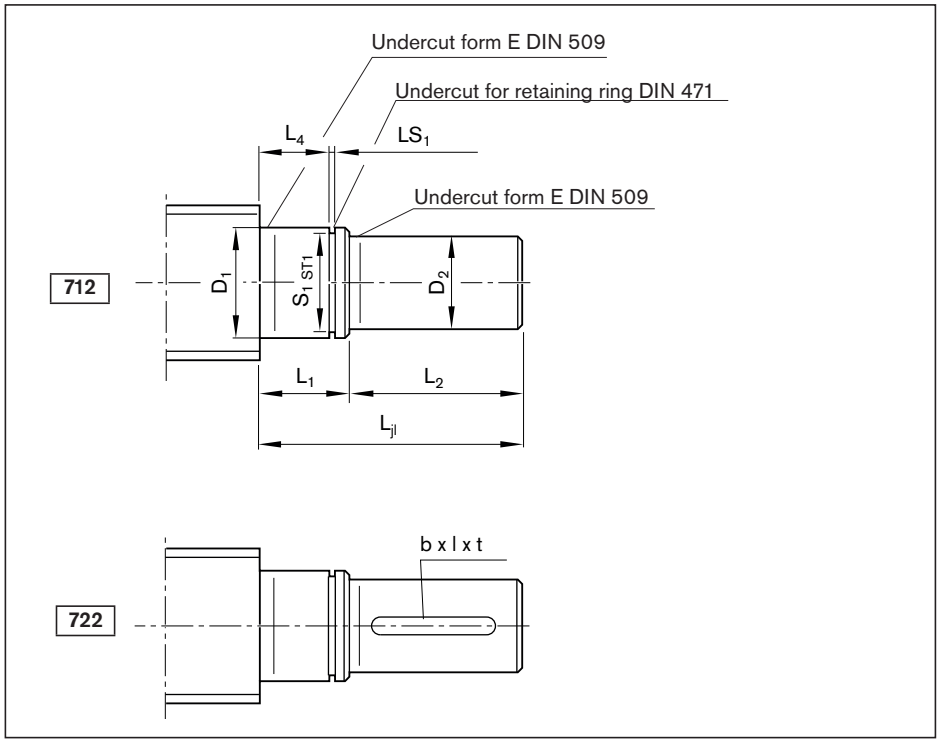

Option (machining of end face)	
K	None
Z	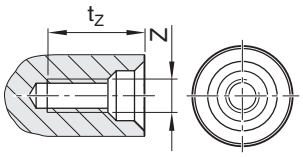
S	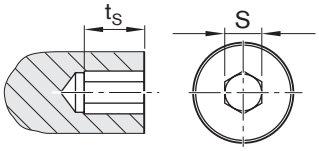
G	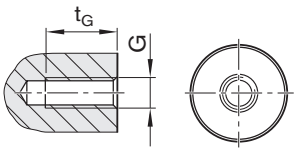

Ordering data:

PLSA	20 x 5R	FEM-E-S	00	1	0	T7	R	712Z120	822K150	1250	1	1

Form	Version[1]	Size	(mm)								
		d_0 x P	L_{il}	D_1 j6	L_1	D_2 h7	L_2	L_4	S_1	ST1	LS_1 H13
712	**120**	**20 x 5**	38	12	13	10	25	10	11.5	h11	1.10
722[2]	**150**	**20 x 5**	39	15	14	12	25	11	14.3	h11	1.10
	170	**25 x 5**	45	17	15	15	30	12	16.2	h11	1.10
		25 x 10	45	17	15	15	30	12	16.2	h11	1.10
	200	**30 x 5**	58	20	18	18	40	14	19.0	h11	1.30
		30 x 10	58	20	18	18	40	14	19.0	h11	1.30
	250	**30 x 5**	69	25	19	22	50	15	23.9	h12	1.30
		30 x 10	69	25	19	22	50	15	23.9	h12	1.30
	300	**39 x 5**	70	30	20	28	50	16	28.6	h12	1.60
		39 x 10	70	30	20	28	50	16	28.6	h12	1.60
	350	**48 x 5**	82	35	22	32	60	17	33.0	h12	1.60
		48 x 10	82	35	22	32	60	17	33.0	h12	1.60
	500	**60 x 10**	107	50	27	48	80	20	47.0	h12	2.15
		60 x 20	107	50	27	48	80	20	47.0	h12	2.15
	600	**75 x 10**	109	60	29	58	80	22	57.0	h12	2.15
		75 x 20	109	60	29	58	80	22	57.0	h12	2.15

1) The allocation of screw ends to the bearing assemblies is clearly defined by the version.
2) Keyway with form 722 only
3) Scope of delivery per assembly: 1 bearing, 2 retaining rings.

For the codes, see the chapter entitled “Abbreviations”

End bearings for screw ends form 712, 722

Application

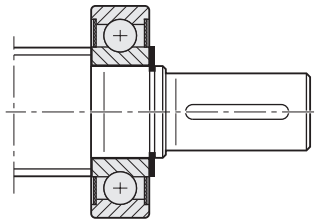

Bearing assembly LAD[3)]

Version[1)]	Size	DIN 6885[2)] keyway			Centering hole		Hex socket		Thread		M_p (Nm) Form		Bearing assembly
	d_0 x P	b	l	t	Z	t_Z	S	t_S	G	t_G	712	722	LAD[2)]
		P9											Part number
120	**20 x 5**	3	20	1.8	M3	9.0	4	4	M4	6	16.2	12.7	R1590 612 00
150	**20 x 5**	4	20	2.5	M4	10.0	4	4	M5	8	29.1	21.6	R1590 615 00
170	**25 x 5**	5	25	3.0	M5	12.5	4	4	M6	9	40.2	40.2	R1590 617 00
	25 x 10	5	25	3.0	M5	12.5	4	4	M6	9	40.2	40.2	R1590 617 00
200	**30 x 5**	6	28	3.5	M6	16.0	5	5	M6	9	61.4	61.4	R1590 620 00
	30 x 10	6	28	3.5	M6	16.0	5	5	M6	9	61.4	61.4	R1590 620 00
250	**30 x 5**	6	36	3.5	M8	19.0	6	6	M8	12	118.2	118.2	R1590 625 00
	30 x 10	6	36	3.5	M8	19.0	6	6	M8	12	118.3	118.3	R1590 625 00
300	**39 x 5**	8	36	4.0	M10	22.0	10	10	M10	15	173.6	173.6	R1590 630 00
	39 x 10	8	36	4.0	M10	22.0	10	10	M10	15	173.8	173.8	R1590 630 00
350	**48 x 5**	10	40	5.0	M12	28.0	10	10	M12	18	244.6	244.6	R1590 635 00
	48 x 10	10	40	5.0	M12	28.0	10	10	M12	18	244.9	244.9	R1590 635 00
500	**60 x 10**	14	63	5.5	M16	36.0	17	17	M16	24	669.6	669.6	R1590 650 00
	60 x 20	14	63	5.5	M16	36.0	17	17	M16	24	671.1	671.1	R1590 650 00
600	**75 x 10**	16	63	6.0	M20	42.0	19	19	M20	30	1,142.4	1,142.4	R1590 660 00
	75 x 20	16	63	6.0	M20	42.0	19	19	M20	30	1,144.5	1,144.5	R1590 660 00

Form 812, 822

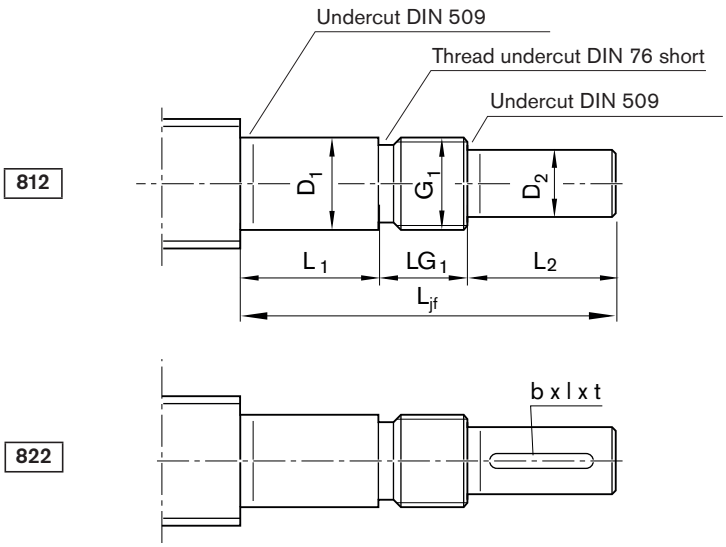

Option (machining of end face)	
K	None
Z	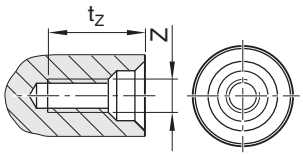
S	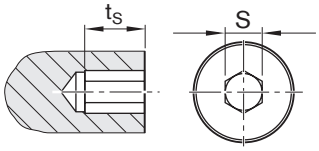
G	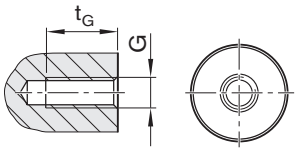

Ordering data:

PLSA	20 x 5R	FEM-E-S	00	1	0	T7	R	822Z150	412Z120	1250	1	1

Form	Version[1]	Size	(mm)							DIN 6885[2] keyway		
		d_0 x P	L_{jf}	D_1 h6	L_1	D_2 h7	L_2	G_1	LG_1	b P9	l	t
812	**150**	**20 x 5**	70	15	23	12	25	M15x1	22	4	20	2.5
822[2]	**153**	**20 x 5**	97	15	50	12	25	M15x1	22	4	20	2.5
	170	**25 x 5**	100	17	48	15	30	M17x1	22	5	25	3.0
		25 x 10	100	17	48	15	30	M17x1	22	5	25	3.0
	171	**25 x 5**	106	17	54	15	30	M17x1	22	5	25	3.0
		25 x 10	106	17	54	15	30	M17x1	22	5	25	3.0
	205	**30 x 5**	116	20	54	18	40	M20x1	22	6	28	3.5
		30 x 10	116	20	54	18	40	M20x1	22	6	28	3.5
	206	**30 x 5**	120	20	58	18	40	M20x1	22	6	28	3.5
		30 x 10	120	20	58	18	40	M20x1	22	6	28	3.5
	305	**39 x 5**	128	30	54	25	50	M30x1.5	24	8	36	4.0
		39 x 10	128	30	54	25	50	M30x1.5	24	8	36	4.0
	306	**39 x 5**	148	30	74	25	50	M30x1.5	24	8	36	4.0
		39 x 10	148	30	74	25	50	M30x1.5	24	8	36	4.0
	351	**48 x 5**	140	35	66	30	50	M35x1.5	24	8	36	4.0
		48 x 10	140	35	66	30	50	M35x1.5	24	8	36	4.0
	352	**48 x 5**	156	35	82	30	50	M35x1.5	24	8	36	4.0
		48 x 10	156	35	82	30	50	M35x1.5	24	8	36	4.0
	450	**60 x 10**	184	45	98	40	60	M45x1.5	26	12	50	5.0
		60 x 20	184	45	98	40	60	M45x1.5	26	12	50	5.0
	603	**75 x 10**	233	60	122	55	80	M60x2	31	16	63	6.0
		75 x 20	233	60	122	55	80	M60x2	31	16	63	6.0

1) The allocation of screw ends to the bearing assemblies is clearly defined by the version.
2) Keyway with form 822 only
3) Under preparation

For the codes, see the chapter entitled “Abbreviations”

End bearings for screw ends form 812, 822

The bearing assemblies LAF, LAN, LAS consist of:
- 1 bearing
- 1 slotted nut

LAF

LAN

Application

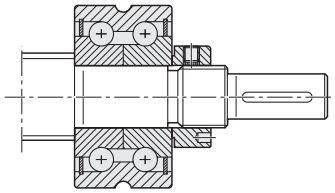

LAS

Version[1)]	Size d_0 x P	Centering hole Z	t_Z	Hex socket S	t_S	Thread G	t_G	M_p (Nm)	Bearing assembly LAF Part number	LAN Part number	LAS Part number
150	**20 x 5R**	M4	10.0	4	4	M5	8	12.1	R159A 015 01	R159A 115 01	–
153	**20 x 5R**	M4	10.0	4	4	M5	8	12.1	–	–	R159A 415 01
170	**25 x 5**	M5	12.5	4	4	M6	9	16.0	[3)]	[3)]	–
	25 x 10	M5	12.5	4	4	M6	9	25.8	[3)]	[3)]	–
171	**25 x 5R**	M5	12.5	4	4	M6	9	16.0	–	–	R159A 417 02
	25 x 10R	M5	12.5	4	4	M6	9	25.8	–	–	R159A 417 02
205	**30 x 5R**	M6	16.0	5	5	M6	9	22.6	R159A 320 01	R159A 220 01	–
	30 x 10R	M6	16.0	5	5	M6	9	38.8	R159A 320 01	R159A 220 01	–
206	**30 x 5R**	M6	16.0	5	5	M6	9	22.6	–	–	R159A 420 02
	30 x 10R	M6	16.0	5	5	M6	9	38.8	–	–	R159A 420 02
305	**39 x 5R**	M10	22.0	8	8	M10	15	46.1	R1590 330 30	R1590 230 30	–
	39 x 10R	M10	22.0	8	8	M10	15	86.4	R1590 330 30	R1590 230 30	–
306	**39 x 5R**	M10	22.0	8	8	M10	15	46.1	–	–	R159A 430 01
	39 x 10R	M10	22.0	8	8	M10	15	86.4	–	–	R159A 430 01
351	**48 x 5R**	M10	22.0	10	10	M12	18	62.7	R159A 335 01	R159A 235 01	–
	48 x 10R	M10	22.0	10	10	M12	18	120.4	R159A 335 01	R159A 235 01	–
352	**48 x 5R**	M10	22.0	10	10	M12	18	62.7	–	–	R159A 435 01
	48 x 10R	M10	22.0	10	10	M12	18	120.4	–	–	R159A 435 01
450	**60 x 10R**	M16	36.0	12	12	M16	24	194.3	–	–	R159A 445 01
	60 x 20R	M16	36.0	12	12	M16	24	359.7	–	–	R159A 445 01
603	**75 x 10R**	M20	42.0	19	19	M20	30	324.8	–	–	R159A 460 01
	75 x 20R	M20	42.0	19	19	M20	30	624.2	–	–	R159A 460 01

Form 832, 842

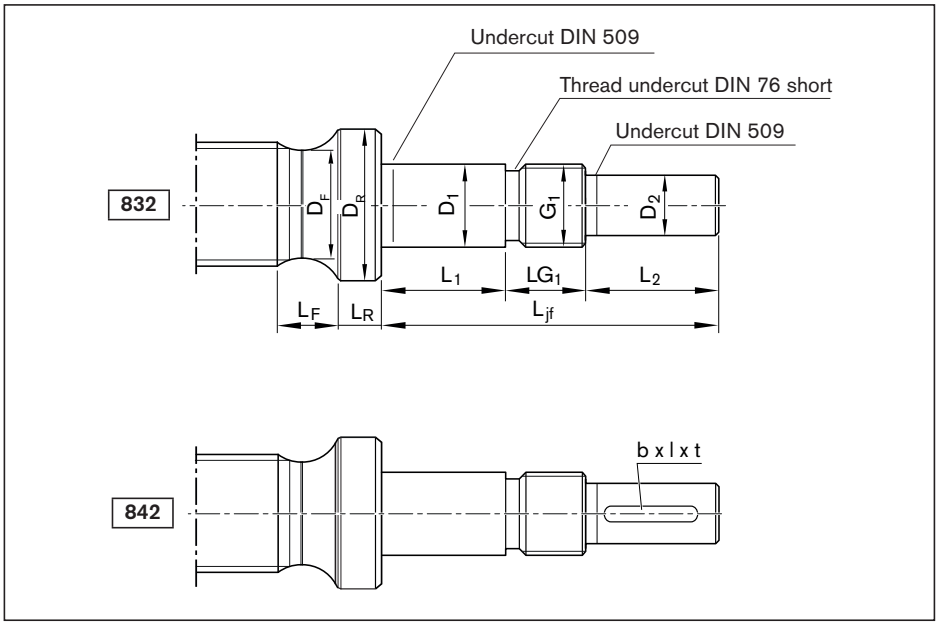

Option (machining of end face)	
K	None
Z	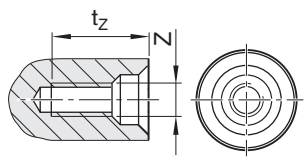
S	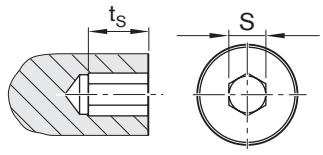
G	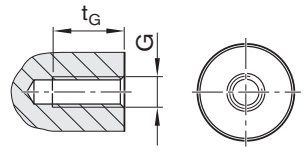

Ordering data:

PLSA	20 x 5R	FEM-E-S	00	1	0	T7	R	842Z201	312Z120	1250	1	1

Form	Version[1]	Size	(mm)											DIN 6885[2] keyway		
		d_0 x P	L_{jf}	D_1 h6	L_1	D_2 h7	L_2	G_1	LG_1	D_R	L_R	D_F	L_F	b P9	l	t
832	**201**	**20 x 5**	116	20	54	18	40	M20x1	22	27	7	19.2	14.0	6	36	3.5
842[2]	**251**	**20 x 5**	157	25	87	20	45	M25x1.5	25	34	7	19.2	26.0	6	40	3.5
	252	**25 x 5**	136	25	66	20	45	M25x1.5	25	34	7	24.2	14.0	6	40	3.5
	253	**25 x 10**	136	25	66	20	45	M25x1.5	25	34	7	24.2	14.0	6	40	3.5
	254	**25 x 5**	157	25	87	20	45	M25x1.5	25	34	7	23.7	14.0	6	40	3.5
	255	**25 x 10**	157	25	87	20	45	M25x1.5	25	34	7	23.7	14.0	6	40	3.5
	301	**30 x 5**	148	30	74	25	50	M30x1.5	24	40	10	29.2	17.0	8	40	4.0
	302	**30 x 10**	148	30	74	25	50	M30x1.5	24	40	10	28.7	17.0	8	40	4.0
	350	**30 x 5**	189	35	108	30	55	M35x1.5	26	45	10	29.2	28.0	8	45	4.0
	351	**30 x 10**	189	35	108	30	55	M35x1.5	26	45	10	28.7	28.0	8	45	4.0
	401	**39 x 5**	176	40	90	36	60	M40x1.5	26	54	12	38.1	24.5	10	50	5.0
	402	**39 x 10**	176	40	90	36	60	M40x1.5	26	54	12	37.7	24.5	10	50	5.0
	505	**39 x 5**	233	50	137	40	65	M50x1.5	31	62	12	38.1	32.0	12	50	5.0
	506	**39 x 10**	233	50	137	40	65	M50x1.5	31	62	12	37.7	32.0	12	50	5.0
	503	**48 x 5**	205	50	106	40	70	M50x1.5	29	62	12	47.2	22.0	12	50	5.0
	504	**48 x 10**	205	50	106	40	70	M50x1.5	29	62	12	46.7	22.0	12	50	5.0
	650	**48 x 5**	310	65	178	60	100	M65x2	32	78	18	47.2	46.0	18	90	7.0
	651	**48 x 10**	310	65	178	60	100	M65x2	32	78	18	46.7	46.0	18	90	7.0
	652	**60 x 10**	310	65	178	60	100	M65x2	32	78	18	58.7	39.0	18	90	7.0
	653	**60 x 20**	310	65	178	60	100	M65x2	32	78	18	57.7	39.0	18	90	7.0
	700	**60 x 10**	271	70	138	65	100	M70x2	33	90	20	58.7	50.0	18	90	7.0
	701	**60 x 20**	271	70	138	65	100	M70x2	33	90	20	57.7	50.0	18	90	7.0
	900	**75 x 10**	327	90	169	85	120	M90x2	38	108	25	73.7	59.0	22	100	9.0
	901	**75 x 20**	327	90	169	85	120	M90x2	38	108	25	72.7	59.0	22	100	9.0
	902	**75 x 10**	389	90	233	85	120	M90x2	36	108	25	73.7	59.0	22	100	9.0
	903	**75 x 20**	389	90	233	85	120	M90x2	36	108	25	72.7	59.0	22	100	9.0

1) The allocation of screw ends to the bearing assemblies is clearly defined by the version.
2) Keyway with form 842 only

For the codes, see the chapter entitled “Abbreviations”

End bearings for screw ends form 832, 842

The bearing assemblies LAS, FEC-F consist of:
- 1 bearing
- 1 slotted nut

Application

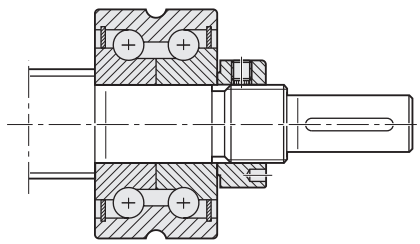

LAS

FEC-F

Version[1)]	Centering hole Z	t_Z	Hex socket S	t_S	Thread G	t_G	M_p (Nm)	Bearing assembly LAS Part number	FEC-F Part number
201	M6	16	5	5	M6	9	22.9	R159A 420 01	–
251	M6	16	5	5	M8	12	28.6	–	R159B 425 01
252	M6	16	5	5	M8	12	33.3	R159A 425 01	–
253	M6	16	5	5	M8	12	60.5	R159A 425 01	–
254	M6	16	5	5	M8	12	33.3	–	R159B 425 01
255	M6	16	5	5	M8	12	60.5	–	R159B 425 01
301	M10	22	8	8	M10	15	45.8	R159A 430 01	–
302	M10	22	8	8	M10	15	85.9	R159A 430 01	–
350	M10	22	10	10	M12	18	54.3	–	R159B 435 01
351	M10	22	10	10	M12	18	108.6	–	R159B 435 01
401	M12	28	12	12	M12	18	80.2	R159A 440 01	–
402	M12	28	12	12	M12	18	156.0	R159A 440 01	–
505	M16	36	12	12	M16	24	91.1	–	R159B 450 01
506	M16	36	12	12	M16	24	175.4	–	R159B 450 01
503	M16	36	12	12	M16	24	121.3	R159A 450 01	–
504	M16	36	12	12	M16	24	237.3	R159A 450 01	–
650	M20	42	19	19	M24	36	137.4	–	R159B 465 01
651	M20	42	19	19	M24	36	279.9	–	R159B 465 01
652	M20	42	19	19	M24	36	408.1	–	R159B 465 01
653	M20	42	19	19	M24	36	771.4	–	R159B 465 01
700	M20	42	19	19	M24	36	423.8	R159A 470 01	–
701	M20	42	19	19	M24	36	793.8	R159A 470 01	–
900	M20	42	19	19	M30	45	656.2	R159A 490 01	–
901	M20	42	19	19	M30	45	1,250.0	R159A 490 01	–
902	M20	42	19	19	M30	45	656.2	–	R159B 490 01
903	M20	42	19	19	M30	45	1,250.0	–	R159B 490 01

Form 912, 922

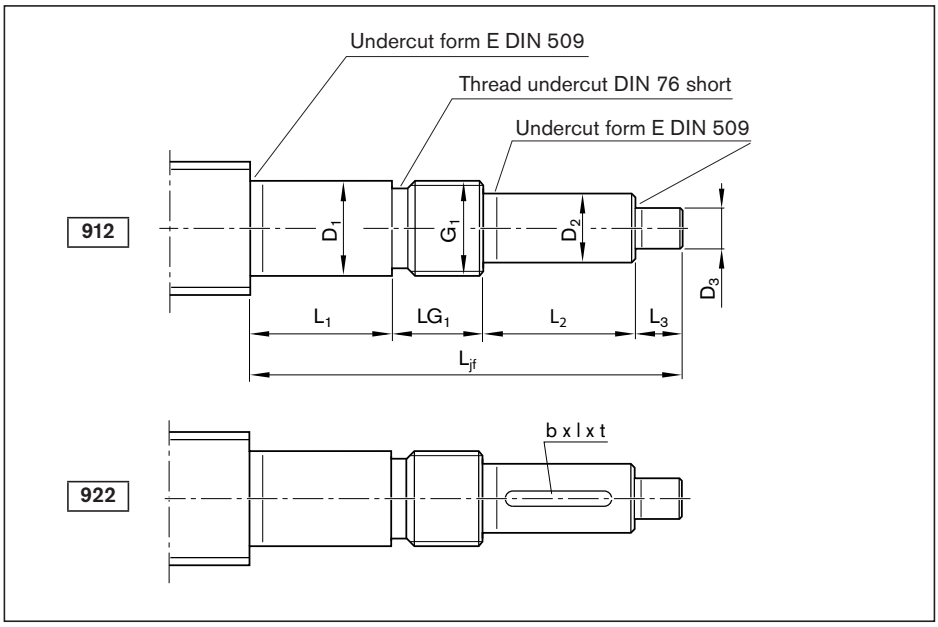

Option (machining of end face)	
K	None

Ordering data:

PLSA	20 x 5R	FEM-E-S	00	1	0	T7	R	922Z151	312Z120	1250	1	1

Form	Version[1]	Size	(mm)								
		d_0 x P	L_{jf}	D_1 h6	L_1	D_2 h7	L_2	D_3 h7	L_3	G_1	LG_1
912	**150**	**20 x 5**	85	15	23	12	25	6	15	M15X1	22
922[2]	**151**	**20 x 5**	112	15	50	12	25	6	15	M15x1	22
	170	**25 x 5**	115	17	48	15	30	6	15	M17x1	22
		25 x 10	115	17	48	15	30	6	15	M17x1	22
	171	**25 x 5**	121	17	54	15	30	6	15	M17x1	22
		25 x 10	121	17	54	15	30	6	15	M17x1	22
	200	**30 x 5**	131	20	54	18	40	6	15	M20x1	22
		30 x 10	131	20	54	18	40	6	15	M20x1	22
	201	**30 x 5**	135	20	58	18	40	6	15	M20x1	22
		30 x 10	135	20	58	18	40	6	15	M20x1	22
	300	**39 x 5**	143	30	54	25	50	6	15	M30x1.5	24
		39 x 10	143	30	54	25	50	6	15	M30x1.5	24
	301	**39 x 5**	163	30	74	25	50	6	15	M30x1.5	24
		39 x 10	163	30	74	25	50	6	15	M30x1.5	24
	350	**48 x 5**	155	35	66	30	50	6	15	M35x1.5	24
		48 x 10	155	35	66	30	50	6	15	M35x1.5	24
	351	**48 x 5**	171	35	82	30	50	6	15	M35x1.5	24
		48 x 10	171	35	82	30	50	6	15	M35x1.5	24
	450	**60 x 10**	199	45	98	40	60	6	15	M45x1.5	26
		60 x 20	199	45	98	40	60	6	15	M45x1.5	26
	600	**75 x 10**	248	60	122	55	80	6	15	M60x2	31
		75 x 20	248	60	122	55	80	6	15	M60x2	31

1) The allocation of screw ends to the bearing assemblies is clearly defined by the version.
2) Keyway with form 922 only
3) Under preparation

For the codes, see the chapter entitled “Abbreviations”

End bearings for screw ends form 912, 922

The bearing assemblies LAF, LAN, LAS consist of:
- 1 bearing
- 1 slotted nut

LAF

LAN

Application

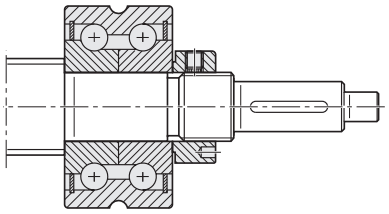

LAS

					M_p (Nm)	Bearing assembly		
Version[1)]	Size	DIN 6885[2)] keyway				Pillow block unit	Bearing	
	d_0 x P	b	l	t		LAF	LAN	LAS
		P9				Part number	Part number	Part number
150	**20 x 5**	4	20	2.5	12.1	R159A 015 01	R159A 115 01	–
151	**20 x 5**	4	20	2.5	12.1	–	–	R159A 415 01
170	**25 x 5**	5	25	3.0	16.0	[3)]	[3)]	–
	25 x 10	5	25	3.0	25.8	[3)]	[3)]	–
171	**25 x 5**	5	25	3.0	16.0	–	–	R159A417 02
	25 x 10	5	25	3.0	25.8	–	–	R159A417 02
200	**30 x 5**	6	28	3.5	22.6	R159A 320 01	R159A 220 01	–
	30 x 10	6	28	3.5	38.8	R159A 320 01	R159A 220 01	–
201	**30 x 5**	6	28	3.5	22.6	–	–	R159A 420 02
	30 x 10	6	28	3.5	38.8	–	–	R159A 420 02
300	**39 x 5**	8	36	4.0	46.1	R1590 330 30	R1590 230 30	–
	39 x 10	8	36	4.0	86.4	R1590 330 30	R1590 230 30	–
301	**39 x 5**	8	36	4.0	46.1	–	–	R159A 430 01
	39 x 10	8	36	4.0	86.4	–	–	R159A 430 01
350	**48 x 5**	8	36	4.0	62.7	R159A 335 01	R159A 235 01	–
	48 x 10	8	36	4.0	120.4	R159A 335 01	R159A 235 01	–
351	**48 x 5**	8	36	4.0	62.7	–	–	R159A 435 01
	48 x 10	8	36	4.0	120.4	–	–	R159A 435 01
450	**60 x 10**	12	50	5.0	194.3	–	–	R159A 445 01
	60 x 20	12	50	5.0	359.7	–	–	R159A 445 01
600	**75 x 10**	16	63	6.0	324.8	–	–	R159A 460 01
	75 x 20	16	63	6.0	624.2	–	–	R159A 460 01

Form 932, 942

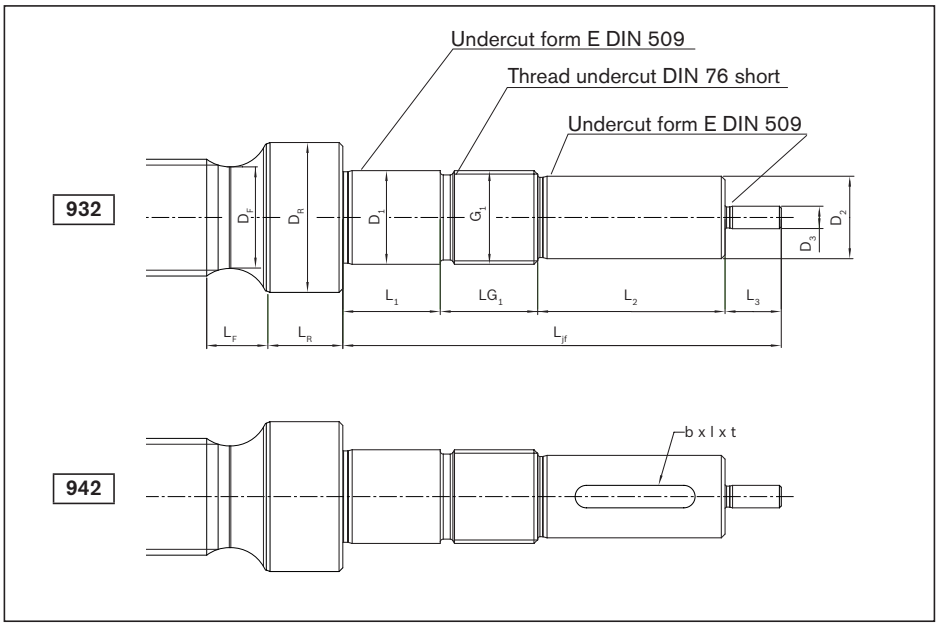

Option (machining of end face)	
K	None

Ordering data:

PLSA	20 x 5R	FEM-E-S	00	1	0	T7	R	942Z251	412Z120	1250	1	1

Form	Version[1]	Size	(mm)												
		d_0 x P	L_{jf}	D_1 h6	L_1	D_2 h7	L_2	D_3 h7	L_3	G_1	LG_1	D_R	L_R	D_F	L_F
932	**201**	**20 x 5**	131	20	54	18	40	6	15	M20x1	22	27	7	19.2	14.0
942[2]	**251**	**20 x 5**	172	25	87	20	45	6	15	M25x1.5	25	34	7	19.2	26.0
	252	**25 x 5**	151	25	66	20	45	6	15	M25x1.5	25	34	7	24.2	14.0
	253	**25 x 10**	151	25	66	20	45	6	15	M25x1.5	25	34	7	23.7	14.0
	254	**25 x 5**	172	25	87	20	45	6	15	M25x1.5	25	34	7	24.2	14.0
	255	**25 x 10**	172	25	87	20	45	6	15	M25x1.5	25	34	7	23.7	14.0
	301	**30 x 5**	163	30	74	25	50	6	15	M30x1.5	24	40	10	29.2	17.0
	302	**30 x 10**	163	30	74	25	50	6	15	M30x1.5	24	40	10	28.7	17.0
	350	**30 x 5**	204	35	108	30	55	6	15	M35x1.5	26	45	10	29.2	28.0
	351	**30 x 10**	204	35	108	30	55	6	15	M35x1.5	26	45	10	28.7	28.0
	401	**39 x 5**	191	40	90	36	60	6	15	M40x1.5	26	54	12	38.1	24.5
	402	**39 x 10**	191	40	90	36	60	6	15	M40x1.5	26	54	12	37.7	24.5
	505	**39 x 5**	248	50	137	40	65	6	15	M50x1.5	31	62	12	38.1	32.0
	506	**39 x 10**	248	50	137	40	65	6	15	M50x1.5	31	62	12	37.7	32.0
	503	**48 x 5**	220	50	106	40	70	6	15	M50x1.5	29	62	12	47.2	22.0
	504	**48 x 10**	220	50	106	40	70	6	15	M50x1.5	29	62	12	46.7	22.0
	650	**48 x 5**	325	65	178	60	100	6	15	M65x2	32	78	18	47.2	46.0
	651	**48 x 10**	325	65	178	60	100	6	15	M65x2	32	78	18	46.7	46.0
	700	**60 x 10**	286	70	138	65	100	6	15	M70x2	33	90	20	58.7	50.0
	701	**60 x 20**	286	70	138	65	100	6	15	M70x2	33	90	20	57.7	50.0
	652	**60 x 10**	325	65	178	60	100	6	15	M65x2	32	78	18	58.7	39.0
	653	**60 x 20**	325	65	178	60	100	6	15	M65x2	32	78	18	57.7	39.0
	900	**75 x 10**	342	90	169	85	120	6	15	M90x2	38	108	25	73.7	59.0
	901	**75 x 20**	342	90	169	85	120	6	15	M90x2	38	108	25	72.7	59.0
	902	**75 x 10**	404	90	233	85	120	6	15	M90x2	36	108	25	73.7	59.0
	903	**75 x 20**	404	90	233	85	120	6	15	M90x2	36	108	25	72.7	59.0

1) The allocation of screw ends to the bearing assemblies is clearly defined by the version.
2) Keyway with form 942 only

For the codes, see the chapter entitled “Abbreviations”

End bearings for screw ends form 932, 942

The bearing assemblies FEC-F, LAS consist of:
- 1 bearing
- 1 slotted nut

Application

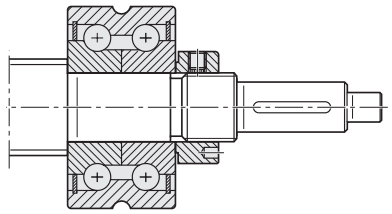

LAS

FEC-F

				M_p (Nm)	Bearing assembly	
Version[1)]	Keyway as per DIN[2)] 6885[2)]					
	b	l	t		LAS	FEC-F
	P9				Part number	Part number
201	6	36	3.5	22.9	R159A 420 01	–
251	6	40	3.5	28.6	–	R159B 425 01
252	6	40	3.5	33.3	R159A 425 01	–
253	6	40	3.5	60.5	R159A 425 01	–
254	6	40	3.5	33.3	–	R159B 425 01
255	6	40	3.5	60.5	–	R159B 425 01
301	8	40	4.0	45.8	R159A 430 01	–
302	8	40	4.0	85.9	R159A 430 01	–
350	8	45	4.0	54.3	–	R159B 435 01
351	8	45	4.0	108.6	–	R159B 435 01
401	10	50	5.0	80.2	R159A 440 01	–
402	10	50	5.0	156.0	R159A 440 01	–
505	12	50	5.0	91.1	–	R159B 450 01
506	12	50	5.0	175.4	–	R159B 450 01
503	12	50	5.0	121.3	R159A 450 01	–
504	12	50	5.0	237.3	R159A 450 01	–
650	18	90	7.0	137.4	–	R159B 465 01
651	18	90	7.0	279.9	–	R159B 465 01
700	18	90	7.0	423.8	R159A 470 01	–
701	18	90	7.0	793.8	R159A 470 01	–
652	18	90	7.0	408.1	–	R159B 465 01
653	18	90	7.0	771.4	–	R159B 465 01
900	22	100	9.0	656.2	R159A 49001	–
901	22	100	9.0	1,250.0	R159A 49001	–
902	22	100	9.0	656.2	–	R159B 490 01
903	22	100	9.0	1,250.0	–	R159B 490 01

Overview

Rexroth offers an extensive range of accessories for planetary screw assemblies.
These include bearings and slotted nuts.
A reasonable ratio of the load capacities of the bearing and the planetary screw assembly should be taken into account when dimensioning. Further information is provided in this section.

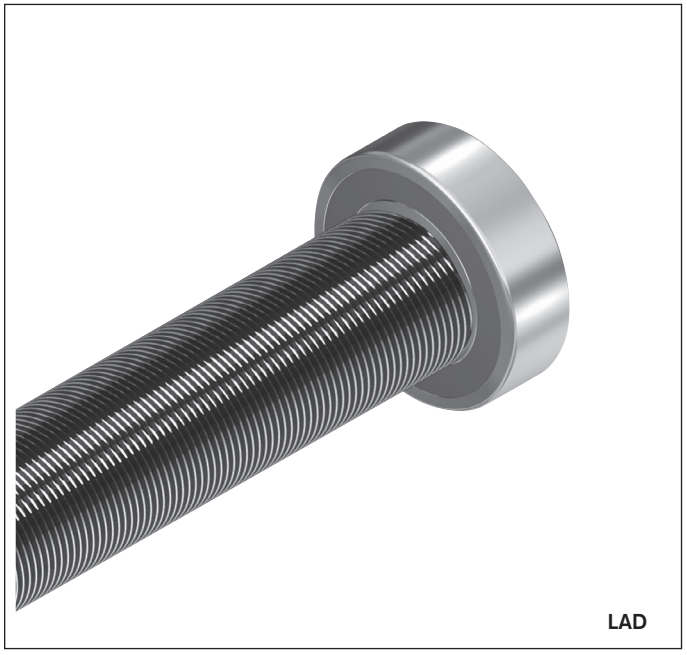

FEC-F

NMA/GWR

Bearing assembly LAF

Fixed bearing with angular-contact thrust ball bearing LGF

Double-thrust, screw-on,
Series LGF-B-…
Double-thrust, screw-on,
Series LGF-C-…

The bearing assembly consists of:
- angular-contact thrust ball bearing LGF (not available as a separate part)
- slotted nut NMA...

Separate technical dimensioning to determine the limit values is absolutely necessary for all attachments (e.g. pillow block units, bearing assembly, etc.)

d_0 x P	LAF Part number	LGF Abbreviation	NMA Abbreviation	NMA Part number	Weight complete m (kg)	C (N)	C_0 (N)	M_{RL} (Nm)	R_{fb} (N/µm)	R_{kl} (Nm/mrad)	n_G (min^{-1})
20 x 5	R159A 015 01	LGF-B-1560	NMA 15x1	R3446 020 04	0.49	17,900	28,000	0.20	400	65	3,500
30 x 5/10	R159A 320 01	LGF-C-2068	NMA 20x1	R3446 015 04	1.35	42,000	94,000	0.45	1,150	320	3,000
39 x 5/10	R1590 330 30	LGF-C-3080	NMA 30x1.5	R3446 016 04	1.76	47,500	127,000	0.75	1,500	620	2,200
48 x 5/10	R159A 335 01	LGF-C-3590	NMA 35x1.5	R3446 012 04	2.49	66,000	177,000	0.90	1,600	900	2,000

For the codes, see the chapter entitled “Abbreviations”

Suitable for screw ends: Form

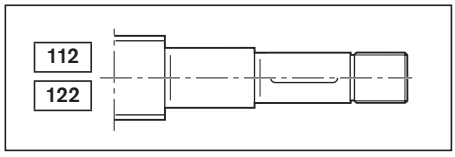

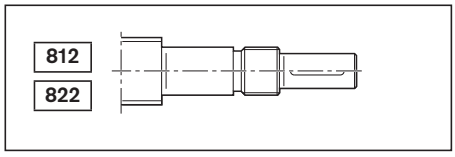

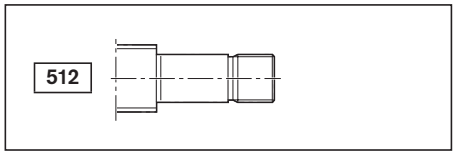

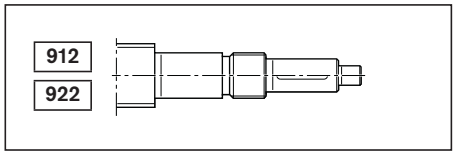

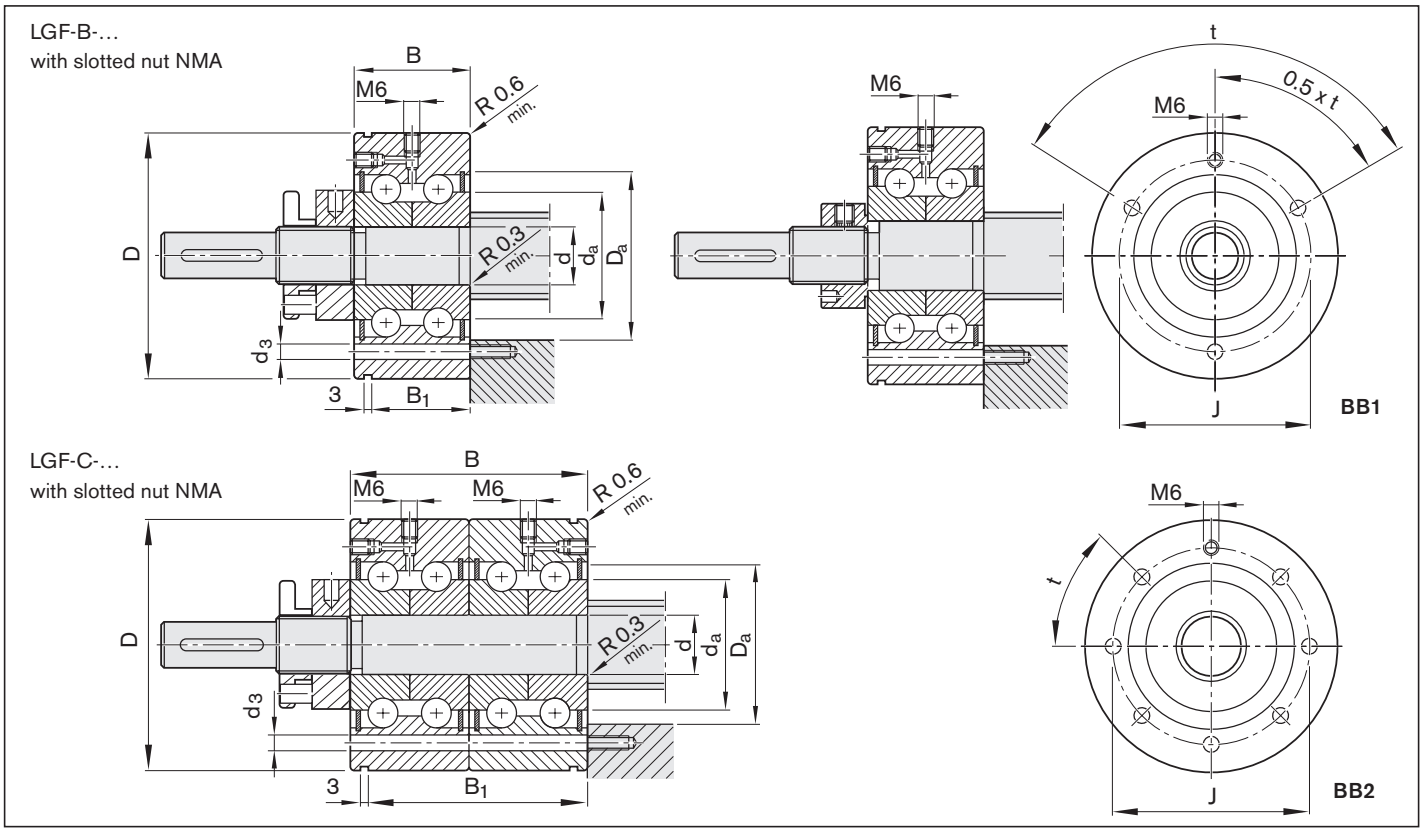

d_0 x P	(mm)									Mounting holes			
	d	D	B	B_1	J	D_a min	D_a max	d_a min	d_a max	Number	d_3 (mm)	t (°)	Hole pattern
20 x 5	15 $_{-0.010}$	60 $_{-0.013}$	25 $_{-0.25}$	17	46	32	35	20	31	3	6.8	120	BB1
30 x 5/10	20 $_{-0.005}$	68 $_{-0.010}$	56 $_{-0.50}$	47	53	40	43	25	39	7	6.8	45	BB2
39 x 5/10	30 $_{-0.005}$	80 $_{-0.010}$	56 $_{-0.50}$	47	63	50	53	40	49	11	6.8	30	BB2
48 x 5/10	35 $_{-0.005}$	90 $_{-0.010}$	68 $_{-0.50}$	59	75	59	62	45	58	7	8.8	45	BB2

Bearing assembly LAN

Fixed bearing with angular-contact thrust ball bearing LGN

Double-thrust,
series LGN-B-…
Double-thrust, in pairs,
series LGN-C-…

The bearing assembly consists of:
- angular-contact thrust ball bearing LGN (not available as a separate part)
- slotted nut NMA...

Separate technical dimensioning to determine the limit values is absolutely necessary for all attachments (e.g. pillow block units, bearing assembly, etc.)

d_0 x P	LAN Part number	LGN Abbreviation	NMA Abbreviation	NMA Part number	Weight complete m (kg)	C (N)	C_0 (N)	M_{RL} (Nm)	R_{fb} (N/µm)	R_{kl} (Nm/mrad)	n_G (min^{-1})
20 x 5	R159A 115 01	LGN-B-1545	NMA 15x1	R3446 020 04	0.27	17,900	28,000	0.20	400	65	3,500
30 x 5/10	R159A 220 01	LGN-C-2052	NMA 20x1	R3446 015 04	0.75	42,000	94,000	0.45	1,150	320	3,000
39 x 5/10	R1590 230 30	LGN-C-3062	NMA 30x1.5	R3446 016 04	0.98	47,500	127,000	0.75	1,500	620	2,200
48 x 5/10	R159A 235 01	LGN-C-3572	NMA 35x1.5	R3446 012 04	1.25	66,000	177,000	0.90	1,600	900	2,000

For the codes, see the chapter entitled “Abbreviations”

Suitable for screw ends: Form

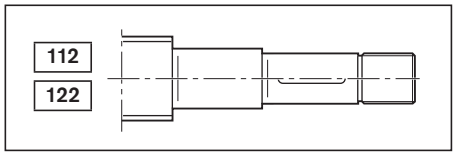

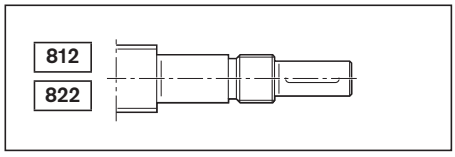

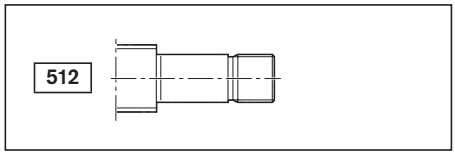

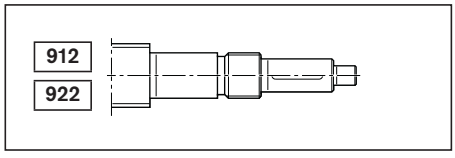

LGN-B-…
with slotted nut NMA

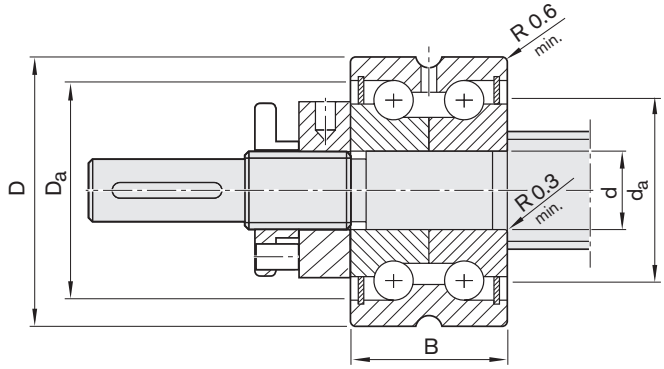

LGN-C-…
with slotted nut NMA

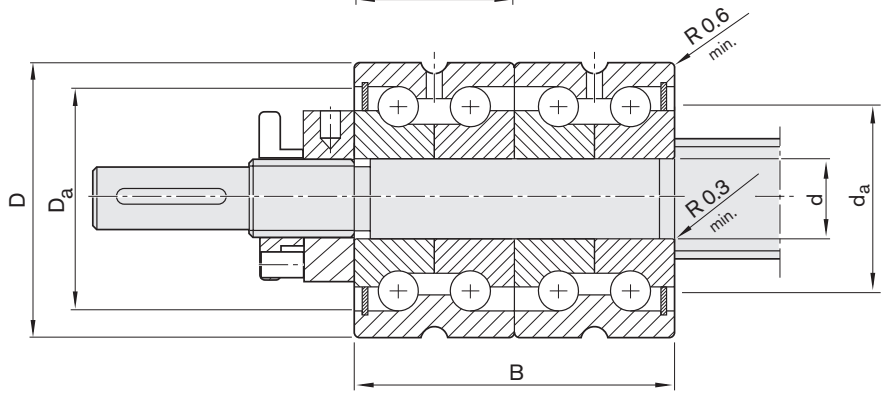

d_0 x P	(mm)						
	d	D	B	D_a		d_a	
				min	max	min	max
20 x 5	15 $_{-0.010}$	45 $_{-0.01}$	25 $_{-0.25}$	32	35	20	31
30 x 5/10	20 $_{-0.005}$	52 $_{-0.01}$	56 $_{-0.50}$	40	43	25	39
39 x 5/10	30 $_{-0.005}$	62 $_{-0.01}$	56 $_{-0.50}$	50	53	40	49
48 x 5/10	35 $_{-0.005}$	72 $_{-0.01}$	68 $_{-0.50}$	59	62	45	58

Bearing assembly LAD

Floating bearing with deep-groove ball bearing

The bearing assembly consists of:
- deep-groove ball bearing as per DIN 625... .2RS
- retaining ring DIN 471 (2 pcs)

Separate technical dimensioning to determine the limit values is absolutely necessary for all attachments (e.g. pillow block units, bearing assembly, etc.)

d_0 x P	LAD	Single parts				Weight complete	C	C_0
		Deep-groove ball bearing DIN 625		Retaining ring DIN 471				
	Part number	Part number	Abbreviation	Abbreviation	Part number	m (kg)	(N)	(N)
20 x 5	R1590 612 00	6201.2RS	R3414 042 00	12x1	R3410 712 00	0.035	6,950	2,650
	R1590 615 00	6202.2RS	R3414 074 00	15x1	R3410 748 00	0.043	7,800	3,250
25 x 5/10	R1590 617 00	6203.2RS	R3414 050 00	17x1	R3410 749 00	0.064	9,500	4,150
30 x 5/10	R1590 620 00	6204.2RS	R3414 038 00	20x1.2	R3410 735 00	0.106	12,700	5,700
	R1590 625 00	6205.2RS	R3414 063 00	25x1.2	R3410 750 00	0.125	14,300	6,950
39 x 5/10	R1590 630 00	6206.2RS	R3414 051 00	30x1.5	R3410 724 00	0.195	19,300	9,800
48 x 5/10	R1590 635 00	6207.2RS	R3414 075 00	35x1.5	R3410 725 00	0.288	25,500	13,200
60 x 10/20	R1590 650 00	6210.2RS	R3414 077 00	50x2	R3410 727 00	0.453	36,500	20,800
75 x 10/20	R1590 660 00	6212.2RS	R3414 078 00	60x2	R3410 764 00	0.783	52,000	31,000

For the codes, see the chapter entitled “Abbreviations”

Suitable for screw ends: Form

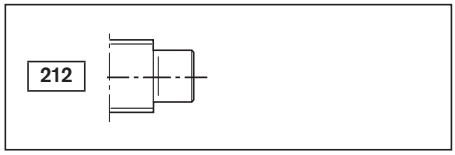

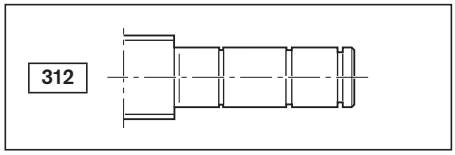

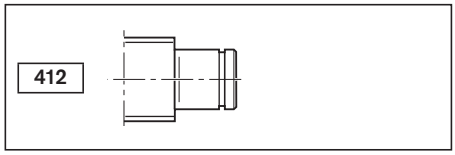

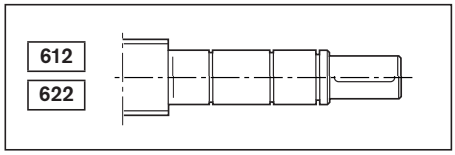

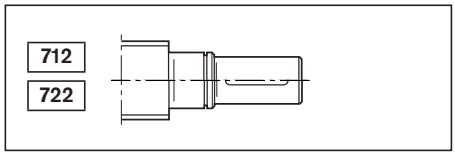

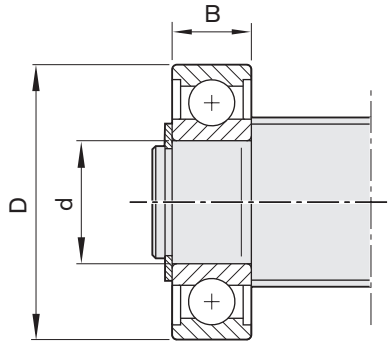

d_0 x P	(mm)		
	d	D	B
20 x 5	12	32	10
	15	35	11
25 x 5/10	17	40	12
30 x 5/10	20	47	14
	25	52	15
39 x 5/10	30	62	16
48 x 5/10	35	72	17
60 x 10/20	50	90	20
75 x 10/20	60	110	22

Bearing assembly LAS

Fixed bearing with angular-contact thrust ball bearing LGS

Double-thrust,
series LAS-E

The bearing assembly consists of:
- angular-contact thrust ball bearing LGS as per DIN 628 (not available as a separate part)
- slotted nut NMA...

Separate technical dimensioning to determine the limit values is absolutely necessary for all attachments (e.g. pillow block units, bearing assembly, etc.)

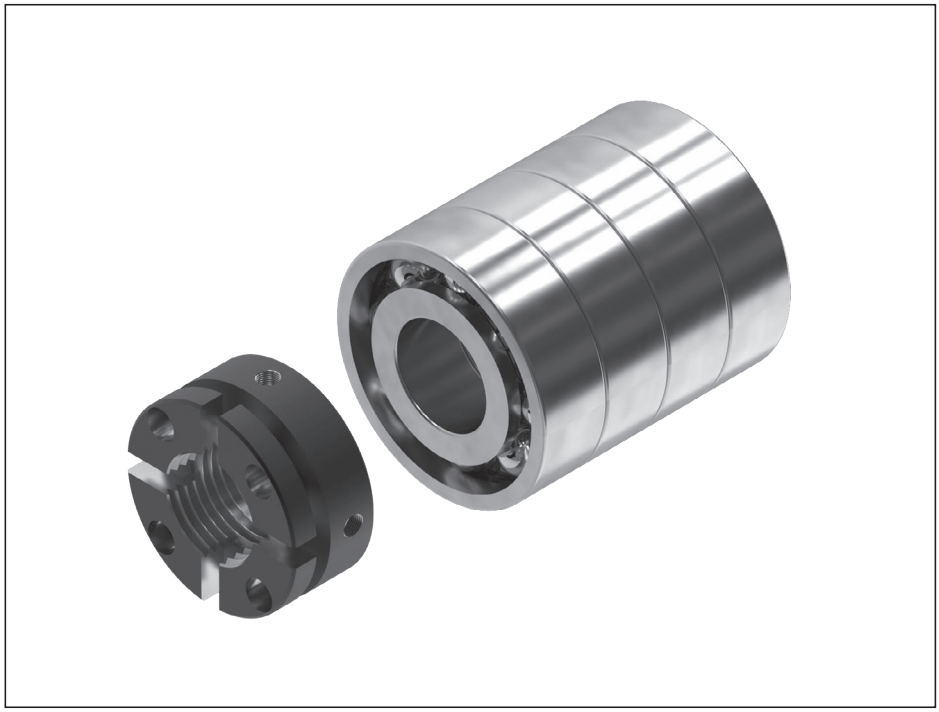

d_0 x P	LAS Part number	LGS Abbreviation	NMA Abbreviation	NMA Part number	Weight complete m (kg)	C (kN)	C_0 (kN)	n_G 1) (min^{-1})
20 x 5	R159A 415 01	LGS-E-1542	NMA 15x1	R3446 020 04	0.39	37.1	51.5	9,000
	R159A 420 01	LGS-E-2047	NMA 20x1	R3446 015 04	0.57	39.9	63.8	8,550
35 x 5/10	R159A 417 02	LGS-E-1747	NMA 17x1	R3446 014 04	0.50	45.3	63.8	9,500
	R159A 425 01	LGS-E-2562	NMA 25x1.5	R3446 011 04	1.10	74.1	120.0	7,500
30 x 5/10	R159A 420 02	LGS-E-2052	NMA 20x1	R3446 015 04	0.73	54.2	80.0	8,100
	R159A 430 01	LGS-E-3072	NMA 30x1.5	R3446 016 04	1.68	98.3	163.1	5,850
39 x 5/10	R159A 430 01	LGS-E-3072	NMA 30x1.5	R3446 016 04	1.68	98.3	163.1	5,850
	R159A 440 01	LGS-E-4090	NMA 40x1.5	R3446 016 08	2.74	140.8	257.7	4,500
48 x 5/10	R159A 435 01	LGS-E-3580	NMA 35x1.5	R3446 012 04	2.19	111.2	188.5	4,950
	R159A 450 01	LGS-E-50110	NMA 50x1.5	R3446 019 04	4.95	211.2	392.3	3,600
60 x 10/20	R159A 445 01	LGS-E-45100	NMA 45x1.5	R9130 342 15	1.70	172.4	319.2	4,050
	R159A 470 01	LGS-E-70150	NMA 70x2	R9130 342 17	10.99	339.2	692.3	2,520
75 x 10/20	R159A 460 01	LGS-E-60130	NMA 60x2	R9130 342 16	7.49	272.5	534.6	3,015
	R159A 490 01	LGS-E-90190	NMA 90x2	R9163 113 51	21.45	470.3	1,123.1	2,025

1) Values as a guide for low bearing load, good heat dissipation and suitable lubricating greases with low consistency

For the codes, see the chapter entitled “Abbreviations”

Suitable for screw ends: Form

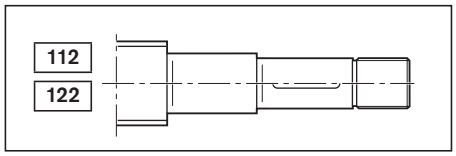

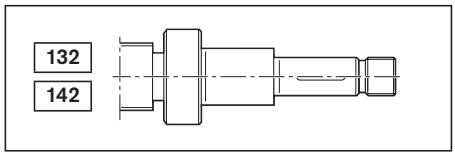

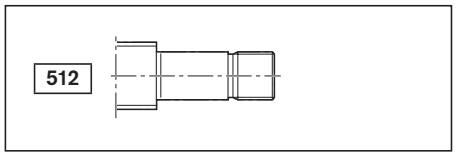

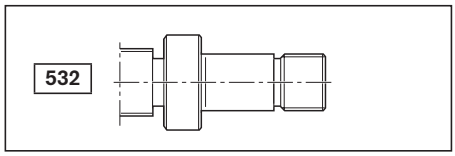

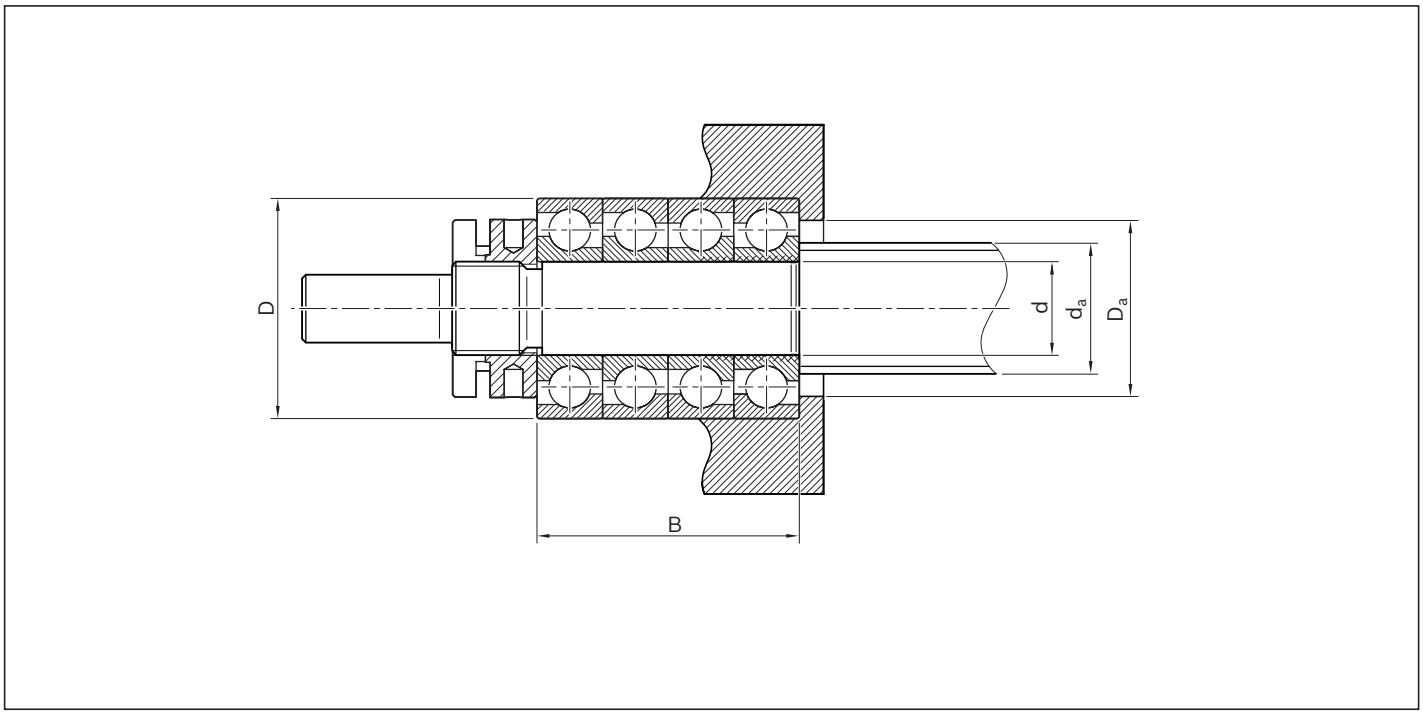

d_0 x P	(mm)						
	d	D	B	D_a		d_a	
				min	max	min	max
20 x 5	15 $_{-0.008}$	42 $_{-0.011}$	52	33.0	36.0	–	–
	20 $_{-0.010}$	47 $_{-0.011}$	56	36.0	41.0	25.6	35.0
25 x 5/10	17 $_{-0.008}$	47 $_{-0.008}$	56	36.2	41.1	22.6	35.2
	25 $_{-0.010}$	62 $_{-0.013}$	68	48.1	55.0	32.0	47.1
30 x 5/10	20 $_{-0.010}$	52 $_{-0.013}$	60	40.0	45.0	–	–
	30 $_{-0.010}$	72 $_{-0.013}$	76	56.5	65.0	37.0	55.5
39 x 5/10	30 $_{-0.010}$	72 $_{-0.013}$	76	56.5	65.0	–	–
	40 $_{-0.012}$	90 $_{-0.015}$	92	72.0	81.0	49.0	71.0
48 x 5/10	35 $_{-0.012}$	80 $_{-0.013}$	84	63.0	71.0	–	–
	50 $_{-0.012}$	110 $_{-0.015}$	108	89.0	100.0	61.0	88.0
60 x 10/20	45 $_{-0.012}$	100 $_{-0.015}$	100	81.0	91.0	–	–
	70 $_{-0.015}$	150 $_{-0.018}$	140	121.0	138.0	82.0	119.0
75 x 10/20	60 $_{-0.015}$	130 $_{-0.018}$	124	106.0	118.0	–	–
	90 $_{-0.020}$	190 $_{-0.030}$	172	153.0	176.0	104.0	150.0

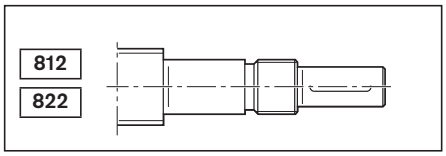

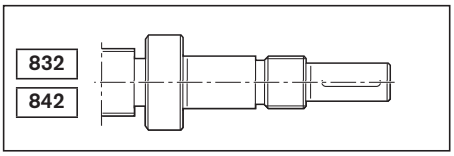

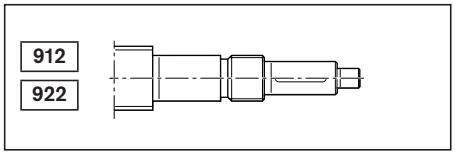

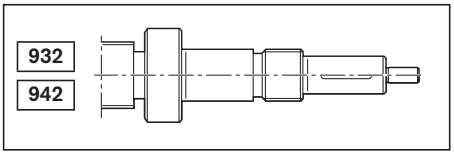

Bearing assembly FEC-F

Fixed bearing with angular-contact thrust ball bearing LGS

The bearing assembly consists of:
- precision flanged housing made of steel
- Angular-contact ball bearing LGS
- Slotted nut NMB

The slotted nut is delivered unmounted

Separate technical dimensioning to determine the limit values is absolutely necessary for all attachments (e.g. pillow block units, bearing assembly, etc.)

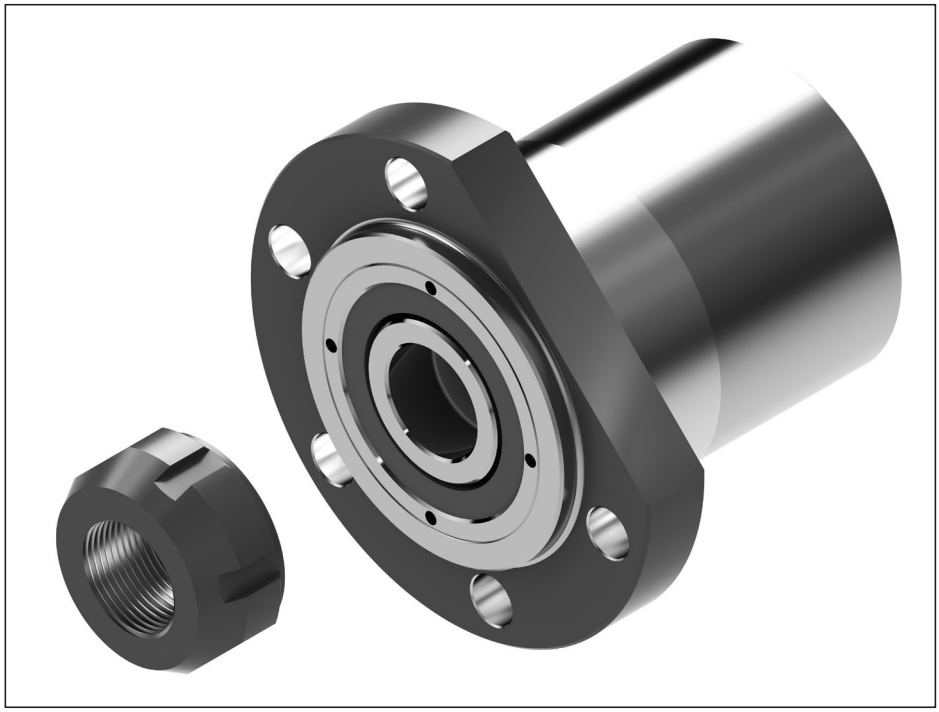

d_0 x P	FEC-F Part number	LGS Part number	NMB Part number	M_A 1) (Nm)	M_{AG} (Nm)	Weight complete m (kg)	C (kN)	C_0 (kN)	M_{RL} 2) (Nm)	R_{fb} (N/µm)	R_{kL} (Nm/mrad)	n_G 3) (min^{-1})
20 x 5	R159B 425 01	LGS-E-2562	NMB 25x1.5	38	8	3.5	74.2	119.2	1.10	450	160	6,900
25 x 5/10	R159B 425 01	LGS-E-2562	NMB 25x1.5	38	8	3.5	74.2	119.2	1.10	450	160	6,900
30 x 5/10	R159B 435 01	LGS-E-3580	NMB 35x1.5	65	8	6.0	109.4	188.4	1.10	600	715	4,950
39 x 5/10	R159B 450 01	LGS-E-50110	NMB 50x1.5	110	18	11.8	208.8	392.3	1.50	750	1,000	3,600
48 x 5/10	R159B 465 01	LGS-E-65140	NMB 65x2	200	18	27.0	305.3	615.4	2.00	1 250	3,200	2,835
60 x 10/20	R159B 465 01	LGS-E-65140	NMB 65x2	200	18	27.0	305.3	615.4	2.00	1 250	3,200	2,835
75 x 10/20	R159B 490 01	LGS-E-90190	NMB 90x2	300	35	53.4	473.1	1,123.0	2.30	1 500	7,500	2,025

1) Assembly with hook wrench (DIN 1810)
2) Measured at 50 rpm
3) Values as a guide for low bearing load, good heat dissipation and suitable lubricating greases with low consistency

For the codes, see the “Abbreviations” on page 207.

Values apply to bearing configuration 2 + 2.
Bearing configurations 3 + 1 or 1 + 3 are possible. Please consult us.

Suitable for screw ends: Form

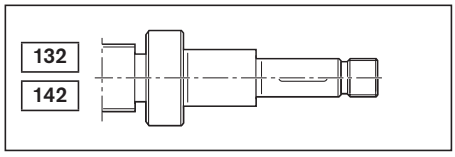

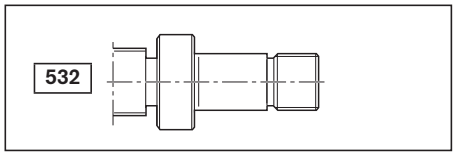

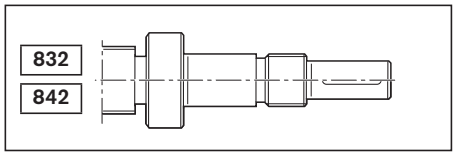

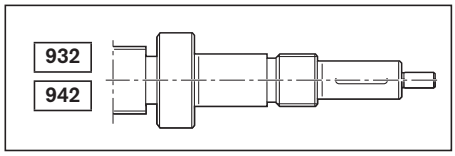

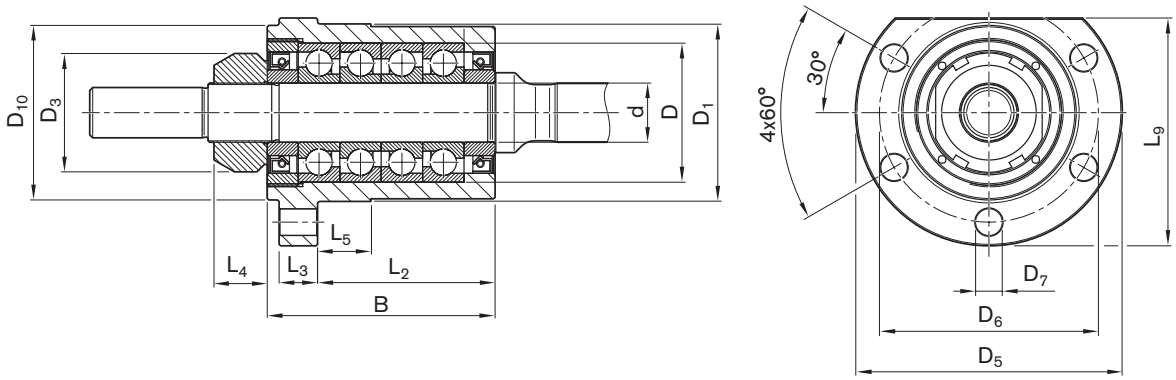

d_0 x P	(mm)													
	d	D	B	L2	L3	L4	L5	L9	D1 h7	D3	D5	D6	D7	D10
20 x 5	$25_{-0.010}$	$62_{-0.013}$	89	68.0	16	20	36.0	104.0	80	44	120	100	11.0	80
25 x 5/10	$25_{-0.010}$	$62_{-0.013}$	89	68.0	16	20	36.0	104.0	80	44	120	100	11.0	80
30 x 5/10	$35_{-0.012}$	$80_{-0.013}$	110	82.0	20	22	47.0	124.0	100	54	140	120	13.0	99
39 x 5/10	$50_{-0.012}$	$110_{-0.015}$	140	98.5	25	25	58.5	152.5	130	75	171	152	13.0	130
48 x 5/10	$65_{-0.015}$	$140_{-0.018}$	180	133.5	30	28	53.5	199.5	170	95	225	198	17.5	170
60 x 10/20	$65_{-0.015}$	$140_{-0.018}$	180	133.5	30	28	53.5	199.5	170	95	225	198	17.5	170
75 x 10/20	$90_{-0.020}$	$190_{-0.018}$	235	179.0	35	32	99.0	257.5	220	125	285	252	22.0	219

Slotted nuts NMA for fixed bearings

Slotted nut NMA

- For maximum vibratory loads
- NMA 15 to 40 with 4 segments
- NMA 45 to 90 with 6 segments

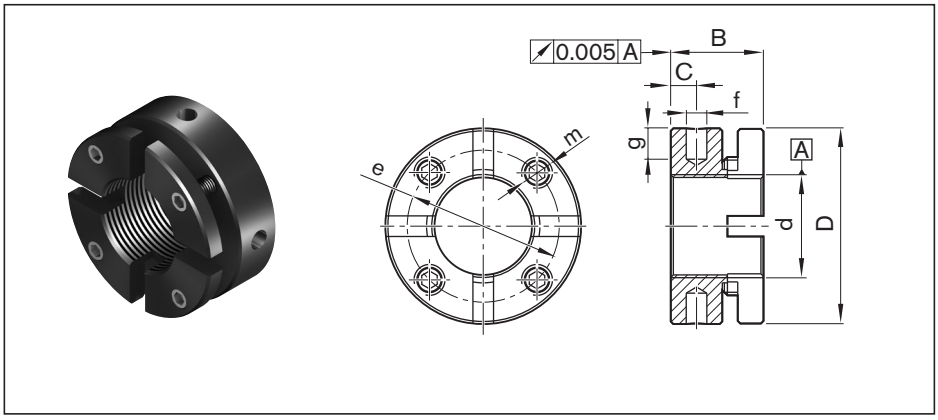

Abbreviation	Part number	(mm)								M_A	F_{aB}	M_{AG}	Mass
		d	D	B	c	m	e	f	g	(Nm)	(kN)	(Nm)	m (g)
NMA 15x1	R3446 020 04	M15x1	30	18	5	M5	24	4	5	10	100	3	60
NMA 17x1	R3446 014 04	M17x1	32	18	5	M5	26	4	5	15	120	3	70
NMA 20x1	R3446 015 04	M20x1	38	18	5	M6	31	4	6	18	145	5	130
NMA 25x1.5	R3446 011 04	M25x1.5	45	20	6	M6	38	5	6	25	205	5	160
NMA 30x1.5	R3446 016 04	M30x1.5	52	20	6	M6	45	5	7	32	250	5	200
NMA 35x1.5	R3446 012 04	M35x1.5	58	20	6	M6	51	5	7	40	280	5	230
NMA 40x1.5	R3446 018 04	M40x1.5	65	22	6	M6	58	6	8	55	350	5	300
NMA 45x1.5	R9130 342 15	M45x1.5	70	22	6	M6	63	6	8	65	360	5	340
NMA 50x1.5	R3446 019 04	M50x1.5	75	25	8	M6	68	6	8	85	450	5	430
NMA 60x2	R9130 342 16	M60x2.0	90	26	8	M8	80	6	8	100	550	15	650
NMA 70x2	R9130 342 17	M70x2.0	100	28	9	M8	90	8	10	130	650	15	790
NMA 90x2	R9163 113 51	M90x2.0	130	32	13	M10	118	8	10	200	900	20	1.530

For the codes, see the chapter entitled “Abbreviations”

Ring nut GWR

– For angular-contact thrust ball bearing LGN

Attention:
Use a threadlocker (for example, Loctite 638) to secure against loosening

MA = Tightening torque for threaded ring

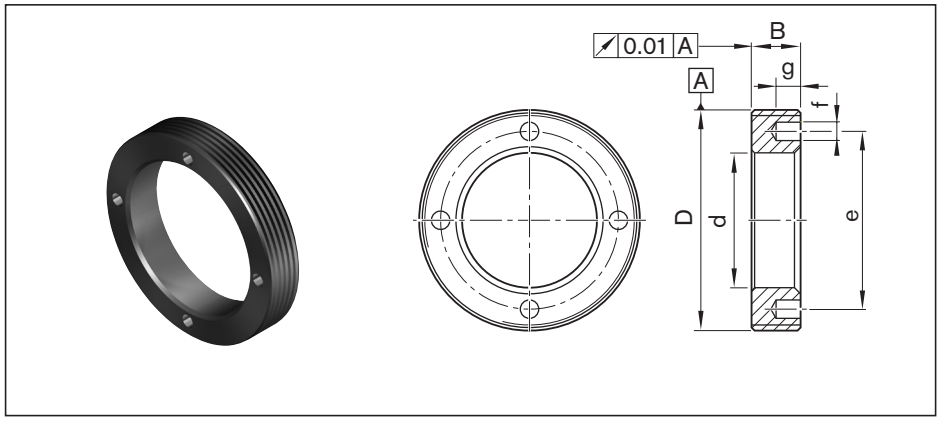

Abbreviation	Part number	(mm)						M_A	Mass
		D	d	B	e	f	g	(Nm)	m (g)
GWR 18x1	R1507 040 33	M18x1	8.5	8	12.5	2.5	3	6	10.0
GWR 23x1	R1507 240 35	M23x1	13.0	8	18.0	2.5	3	8	15.0
GWR 26x1,5	R1507 240 22	M26x1.5	16.5	8	20.5	2.5	3	10	16.5
GWR 30x1,5	R1507 340 34	M30x1.5	17.0	8	23.0	3.0	4	20	29.0
GWR 36x1,5	R1507 040 23	M36x1.5	22.0	8	29.0	3.0	4	25	35.0
GWR 40x1,5	R1507 140 03	M40x1.5	25.0	8	33.0	3.0	4	28	39.5
GWR 45x1,5	R1507 240 04	M45x1.5	28.0	8	38.0	3.0	4	30	55.0
GWR 50x1,5	R1507 240 25	M50x1.5	31.0	10	40.0	4.0	5	45	86.0
GWR 55x1,5	R1507 340 05	M55x1.5	36.0	10	46.0	4.0	5	50	96.0
GWR 58x1,5	R1507 440 32	M58x1.5	43.0	10	50.0	4.0	5	58	84.0
GWR 60x1	R1507 440 28	M60x1	43.0	10	51.0	4.0	5	60	97.0
GWR 62x1,5	R1507 440 29	M62x1.5	43.0	12	53.0	5.0	6	60	127.0
GWR 65x1,5	R1507 440 26	M65x1.5	47.0	12	55.0	4.0	5	70	136.0
GWR 70x1,5	R1507 440 06	M70x1.5	42.0	12	58.0	4.0	5	75	216.0
GWR 78x2	R1507 567 27	M78x2	54.0	15	67.0	6.0	7	90	286.0
GWR 92x2	R1507 640 09	M92x2	65.0	16	82.0	6.0	7	125	385.0
GWR 95x2	R1507 667 28	M95x2	68.0	16	82.0	6.0	7	130	425.0
GWR 112x2	R1507 740 11	M112x2	82.0	18	100.0	8.0	8	175	596.0
GWR 115x2	R1507 767 29	M115x2	85.0	18	100.0	8.0	8	200	664.0

Measuring pads

Alignment of the planetary screw assembly in the machine

Rexroth can provide a gauge with a self-aligning contact pad for easy alignment of the planetary screw assembly.

Two pads of different lengths are available which can be used depending on the screw lead:
- material no. R3305 131 19: length 33 mm
- material no. R3305 131 21: length 50 mm

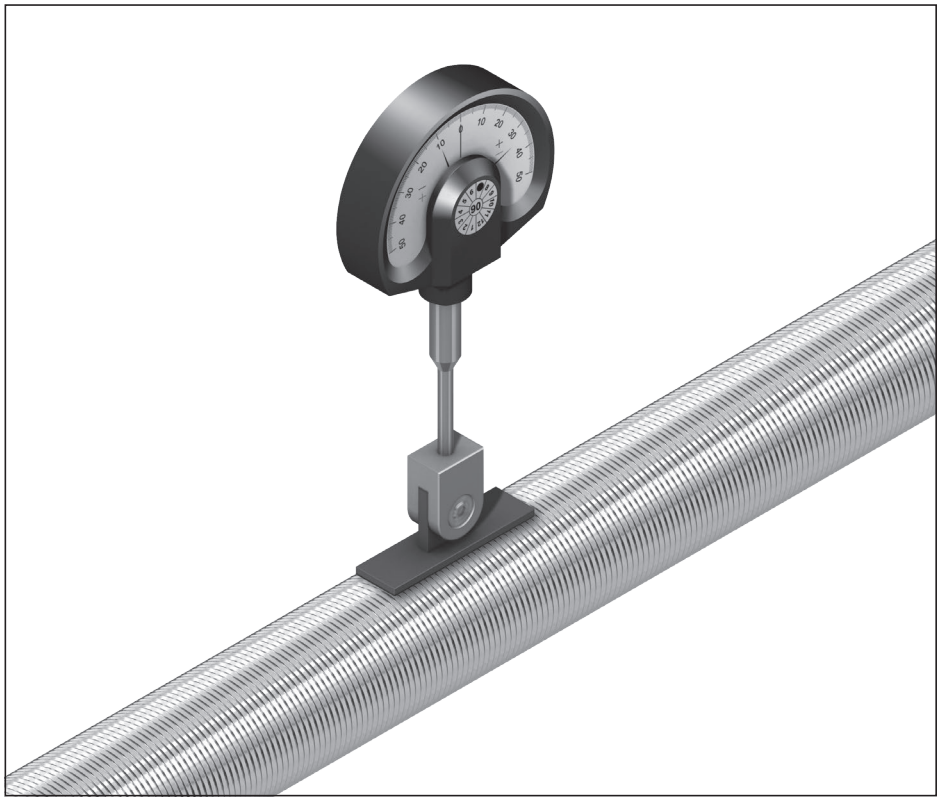

Dial gauge not supplied as standard with the planetary screw assembly

Technical notes

The degree of efficiency determines the torque required to convert the rotary motion into linear motion.

Due to their high mechanical efficiency, PLSAs are in principle not self-locking.

⚠ Safety information

For installation, customers should check whether separate protection against falling loads is required. Please consult us.

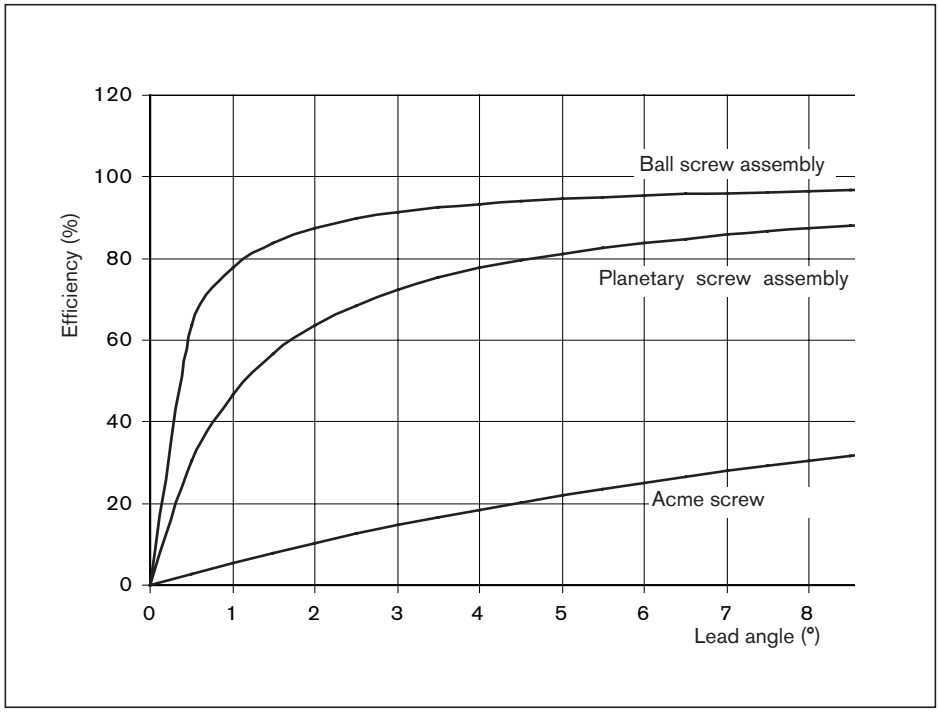

Advantages over the acme screw drive

- The maximum mechanical efficiency of an Acme screw drive is 50%, whereas a planetary screw assembly can achieve 90%, and a ball screw assembly 98%.
- Higher life expectancy due to negligible wear during operation
- Less drive power required
- No stick-slip effect
- More precise positioning
- Higher travel speed
- Less heat-up

Selection criteria for planetary screw assemblies (extract)

The factors below should be considered when selecting the PLSA for a given application:

- degree of accuracy required (lead deviation)
- Load
- Service life
- critical speed
- buckling load
- rigidity/permissible clearance or desired preload
- characteristic speed (max. permissible linear speed)

⚠ Note

Radial and eccentric forces relative to the screw must be avoided, as they can affect the PLSA's performance and shorten its life. Where special conditions of use are involved, please consult us.

The following points should be taken into consideration when selecting a PLSA that is to be both cost-efficient and optimally designed:

- The calculation of the service life should be based on average loads and average speeds, not on maximum values.
- In order for us to provide you with a customized solution, installation drawings or sketches of the nut environment should be enclosed.

Static load rating C_0

The static load rating is an axial, concentrically acting force that induces a permanent deformation of 0.0001 x the rolling element diameter.

Dynamic load rating C

The dynamic load rating is an axial, concentrically acting force of constant magnitude and direction under which 90% of a sufficiently large number of identical PLSAs can achieve a nominal service life of one million revolutions.

Correction factor for tolerance grades

The static load rating C_0 and the dynamic load rating C must be multiplied by the correction factor f_{ac} as appropriate for the specific tolerance grade of the screw.

Tolerance grade T	5	7	9
f_{ac}	1	0.9	0.8

Service life

The nominal service life is expressed by the number of revolutions (or number of operating hours at constant speed) that will be attained or exceeded by 90% of a representative sample of identical planetary screw assemblies before the first signs of material fatigue become evident. The nominal life is designated as L or L_h h, depending on whether it is specified in revolutions or hours.
The nominal life calculation is based on optimal installation and environmental conditions. The service life may be shortened, for example, if the lubrication is affected by exposure to process media.

Critical speed and buckling load

The critical speed and buckling load can be checked using the corresponding charts. For precise calculations
see formula 12 15 , in the section “Design Calculations”

Characteristic speed $d_0 \cdot n$

Rexroth PLSAs can be operated at very high speeds due to their structural design. Characteristic speeds of up to 150,000 are possible depending on the nut type. The characteristic speeds can be exceeded for short periods, please consult us.

$$d_0 \cdot n \leq 150{,}000$$

d_0 = nominal diameter (mm)
n = speed (rpm)

The theoretically possible maximum linear speed v_{max} (m/min) is specified on the page featuring the relevant nut. Actually attainable speeds are heavily dependent among other factors on preload and duty cycle. They are generally restricted by the critical speed. (See “Design Calculations”).

Material, hardness

PLSA's are made of high-quality, heat-treatable steel, carbon chrome alloy steels or case-hardened steels. The screw and nut raceways have a minimum Rockwell hardness of HRC 58. The screw ends are not hardened.

Technical notes

Sealing

PLSAs are precision assemblies that require protection against contamination. Flat protective covers, bellows-type dust boots or other enclosures are particularly suitable for this purpose. As there are some applications in which these methods do not provide sufficient protection, we have developed an additional gapless lip-type seal which ensures an optimal sealing effect and maintains high efficiency due to the low friction level. Our PLSAs can therefore be supplied with lip-type seals as an option.
At the customer's request, the seals can be omitted entirely.
To ensure that seals retain their functionality, dirt must be removed at regular intervals.

Short stroke
Short stroke applications = stroke ≤ nut length

Lubrication:
During a short stroke, the planets do not make a real turn. It is therefore impossible for an adequate lubricating film to form. This may result in premature wear.
To avoid this, it is sufficient to perform longer strokes at regular intervals with simultaneous relubrication as "lubricating strokes".

Load rating:
Short stroke applications will increase the number of times a rolling load passes over each point within the load zone.
This reduces the load rating.
Please consult us.

Permissible operating temperatures

Standard design PLSAs allow a continuous temperature of 60 °C (measured on the outer shell of the nut).

Permissible operating temperatures:
$-10\ °C \leq T_{operation} \leq 60\ °C$

Permissible bearing temperatures:
$-15\ °C \leq T_{bearing} \leq 80\ °C$

Applications with high-loading and/or rapid cycles can generate excessive heat. To prevent excessive heating, Bosch Rexroth recommends cooling the screw and/or the nut. Apart from this, we can offer solutions for uses at higher temperatures.

Bearing

When calculating the life expectancy of the overall system, the end bearings must be considered separately.

Acceptance conditions and tolerance grades

Permissible travel deviation

based on DIN ISO 3408-3

Symbol definitions: (excerpt)

l_0 = nominal travel
l_1 = thread length
Δl_0 = travel deviation
l_u = useful travel
l_e = excess travel (the closer tolerances for travel and hardness do not apply here)
c = travel compensation (target travel deviation) (standard: c = 0)
e_p = tolerance mean target travel deviation
ν_{300p} = permissible travel deviation within 300 mm travel
$\nu_{2\pi p}$ = permissible travel deviation within one revolution

T **PLSA with precision screw PSR**

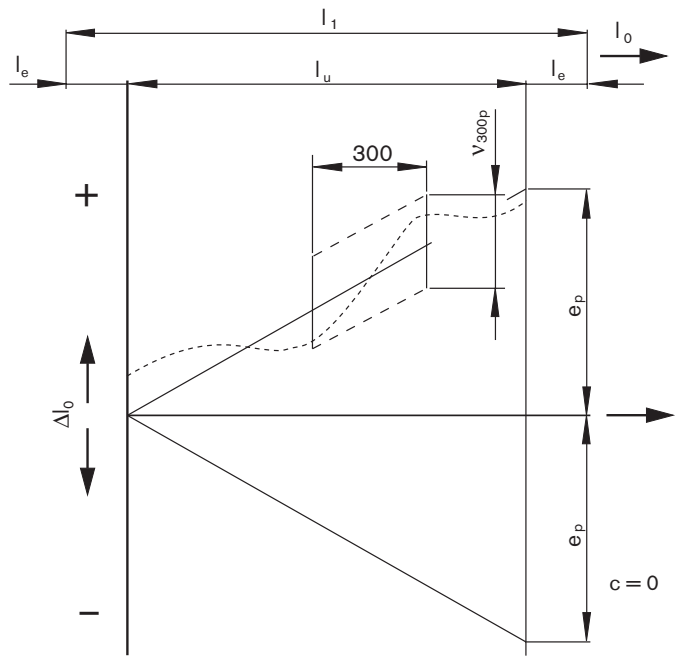

Useful travel l_u		Tolerance mean actual travel deviation e_p (µm) Tolerance grade		
>	≤	5	7	9
0	**100**	18	44	110
100	**200**	20	48	120
200	**315**	23	52	130
315		$e_p = \frac{l_u}{300} \cdot \nu_{300p}$		

For precision screws PSR the following values apply in all cases:

ν_{300p} (µm) Tolerance grade		
5	**7**	**9**
23	52	130

Non-usable length l_e
(Excess travel)

d_0 (mm)	l_e (mm)
20, 25, 30, 39	40
48, 60, 75	50

Minimum number of measurements within 300 mm (measuring interval) and excess travel to be taken into consideration.

Lead P (mm)	Minimum number of measurements for tolerance grade 5	7	9
5	6	3	3
10	3	1	1
20	3	1	1

Acceptance conditions and tolerance grades

Run-outs and location deviations

based on DIN ISO 3408-3

Radial run-out t_5 of the outer diameter of the screw over the length l_5 used to determine the straightness in relation to AA'.

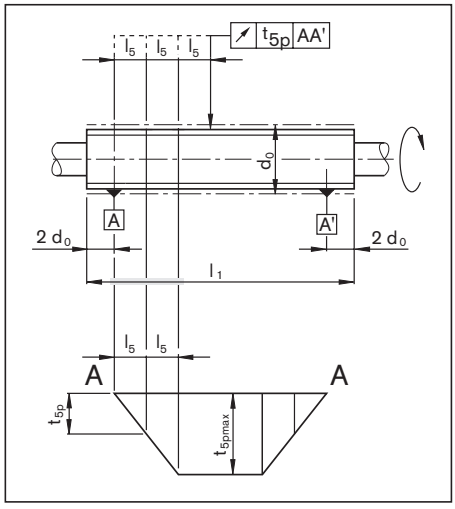

d_0 >	d_0 ≤	l_5	t_{5pmax} in µm for l_5 Tolerance grade 5	7	9
6	**12**	**80**	32	40	60
12	**25**	**160**			
25	**50**	**315**			
50	**100**	**630**			

l_1/d_0 >	l_1/d_0 ≤	t_{5pmax} in µm for $l_1 \geq 4l_5$ Tolerance grade 5	7	9
	40	64	80	120
40	**60**	96	120	180
60	**80**	160	200	300
80	**100**	256	320	480

Coaxial deviation t_6 of the bearing journal in relation to AA' where $\mathbf{l_6} \leq \mathbf{l}$.
Tabular value $\mathbf{t_{6p}}$ applies if $\mathbf{l_6} \leq$ reference length **l**.

Where $l_6 > l$, then $t_{6a} \leq t_{6p} \cdot \frac{l_6}{l}$

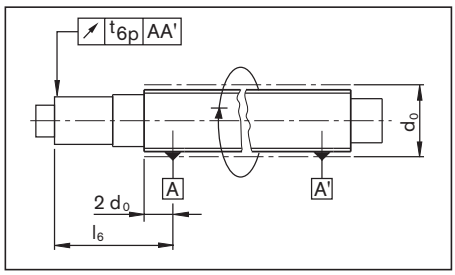

d_0 >	d_0 ≤	Reference length l	t_{6p} in µm for $l_6 \leq l$ Tolerance grade 5	7	9
6	**20**	**80**	20	40	50
20	**50**	**125**	25	50	63
50	**125**	**200**	32	63	80

Coaxial deviation t_7 of the journal diameter of the screw in relation to the bearing diameter for $l_7 > l$.
Tabular value $\mathbf{t_{7p}}$ applies if $\mathbf{l_7} \leq$ reference length **l**.

Where $l_7 > l$, then $t_{7a} \leq t_{7p} \cdot \frac{l_7}{l}$

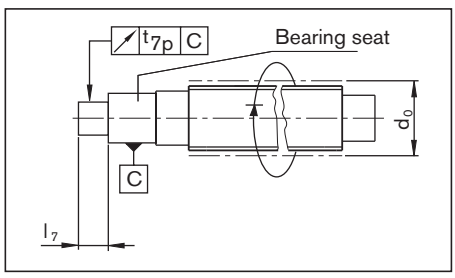

d_0 >	d_0 ≤	Reference length l	t_{7p} in µm for $l_7 \leq l$ Tolerance grade 5	7	9
6	**20**	**80**	8	12	14
20	**50**	**125**	10	16	18
50	**125**	**200**	12	20	23

d_0 = nominal diameter

Axial run-out t_8 of the shaft (bearing) face of the screw in relation to the bearing diameter.

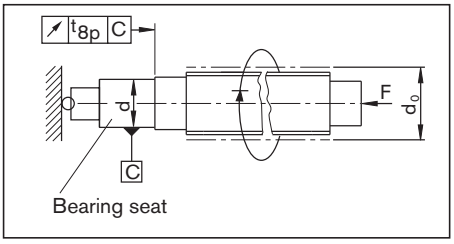

d_0		t_{8p} in µm for tolerance grade		
>	≤	5	7	9
6	**63**	5	6	8
63	**125**	6	8	10

Axial run-out t_9 of the nut location face in relation to **A** and **A'** (for preloaded ball nuts only).

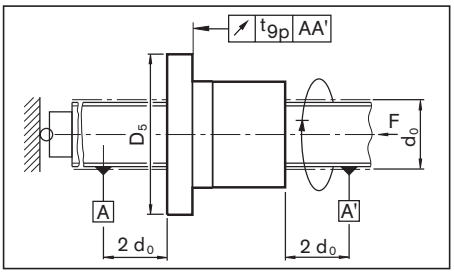

Flange diameter D_5		t_{9p} in µm for tolerance grade	
>	≤	5	7
16	**32**	16	20
32	**63**	20	25
63	**125**	25	32
125	**250**	32	40

Radial run-out t_{10} of the outer diameter D_1 of the nut unit in relation to **A** and **A'** (for preloaded and rotating nuts only). Fix screw to prevent rotation before carrying out the measurement.

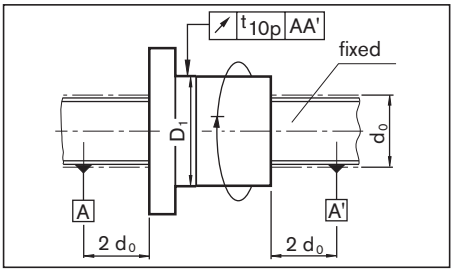

Outer diameter D_1		t_{10p} in µm for tolerance grade	
>	≤	5	7
16	**32**	16	20
32	**63**	20	25
63	**125**	25	32
125	**250**	32	40

Preload, rigidity, friction torques

Nut system preload

In addition to single nuts with reduced backlash, Rexroth supplies preloaded nut systems.

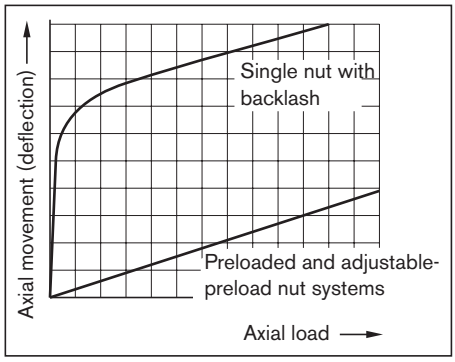

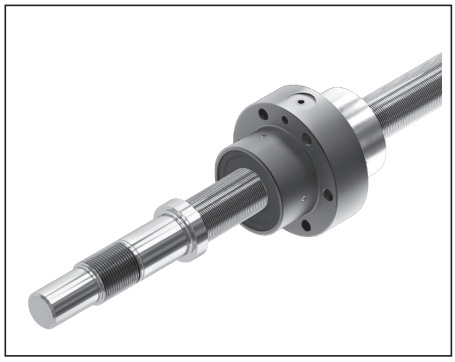

With preloaded nut systems, the deformation due to load cycling is significantly less than that of systems without preload.
Preloaded nut systems should therefore be used in applications requiring a high degree of rigidity.
The preload of the planetary screw assembly will decrease over time as a function of the load and the operating hours.
The screw is typically far less rigid than the nut unit (for details see “Overall axial rigidity...”).

Rigidity

The rigidity of a planetary screw assembly is also influenced by all adjoining parts such as bearings, housing bores, nut housings etc.

Overall axial rigidity R_{bs} of the planetary screw assembly

The overall axial rigidity $\mathbf{R_{bs}}$ is made up of the component rigidity of the bearing $\mathbf{R_{fb}}$, the screw $\mathbf{R_S}$ and the nut unit$\mathbf{R_{nu}}$.

$$\frac{1}{R_{bs}} = \frac{1}{R_{fb}} + \frac{1}{R_S} + \frac{1}{R_{nu}} \qquad (16)$$

Rigidity of the bearing R_{fb}

The rigidity of the bearings corresponds to the values found in the bearing manufacturer’s catalog. See the dimension tables in this catalog for the rigidity values of the bearings that Rexroth can provide.

Rigidity of the screw R_S

The rigidity of the screw $\mathbf{R_S}$ depends on the type of bearing used.
See the corresponding tables for rigidity values.

Note:
Please note that in most cases the rigidity $\mathbf{R_S}$ of the screw will be significantly lower than the rigidity $\mathbf{R_{nu}}$ of the nut unit.

1 PLSA shaft is fixed at one end

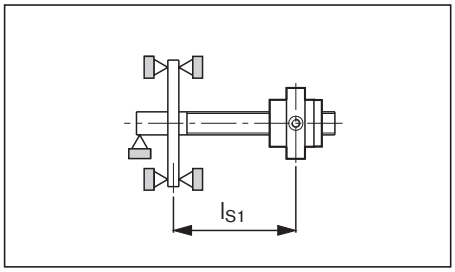

$$R_{S2} = 165 \cdot \frac{(d_0)^2}{l_{S2}} \cdot \frac{l_S}{l_S - l_{S2}} \quad (N/\mu m) \quad (18)$$

$$R_{S1} = 165 \cdot \frac{(d_0)^2}{l_{S1}} \quad (N/\mu m) \quad (17)$$

2 PLSA shaft is fixed at both ends

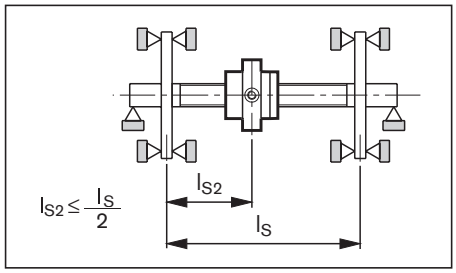

$R_S / R_{S1} / R_{S2}$ = rigidity of the screw (N/µm)
d_0 = nominal diameter (mm)
l_S = distance between bearing and bearing (mm)
l_{S2} = distance between bearing and nut (mm)

The lowest screw rigidity occurs at the center of the screw R_{S2min} ($l_{S2} = l_S/2$) and thus equals:

$$R_{S2min} = 660 \cdot \frac{(d_0)^2}{l_S} \quad (N/\mu m) \quad (19)$$

Rigidity in the area of the nut unit R_{nu}

See the corresponding tables for rigidity values.

Preload and rigidity

d_0 x P	Single nut FEM / ZEM backlash standard (mm)	(preload class C2) R_{nu} (N/µm) max.	T_{p0} (Nm) min.	T_{p0} (Nm) max.	R_S $\left(\frac{N \cdot m}{\mu m}\right)$
20 x 5	0,03	400	0.29	0.66	66
25 x 5		460	0.42	0.92	103
25 x 10		290	0.42	0.92	103
30 x 5		620	0.57	1.24	149
30 x 10		420	0.57	1.24	149
39 x 5		750	0.88	1.92	251
39 x 10		500	0.88	1.92	251
48 x 5		1,080	1.24	2.72	380
48 x 10		760	1.24	2.72	380
60 x 10		1,030	1.79	3.94	594
60 x 20		700	1.79	3.94	594
75 x 10		1,400	2.61	5.17	928
75 x 20		1,000	2.61	5.17	928

Frictional torque of the seals
Seal torque of the nuts

d_0 x P = size
R_S = rigidity of the screw
R_{nu} = rigidity of the nut
T_{RD} = dynamic drag torque of the 2 seals
T_{p0} = dynamic drag torque without seals
T_0 = overall dynamic drag torque
T_0 = $T_{p0} + T_{RD}$

d_0 x P	Dynamic drag torque T_{RD} approx. (Nm) Lip seal	Gap-type seal/cover plate wiper
20 x 5	0.10	0
25 x 5/10	0.10	0
30 x 5/10	0.15	0
39 x 5/10	0.25	0
48 x 5/10	0.35	0
60 x 10/20	0.50	0
75 x 10/20	0.70	0

The values given for dynamic drag torque are proven practical indicators for the nut preloading.

Installation

Delivery condition

Rexroth PLSAs are normally delivered prelubricated with an initial supply of grease. Relubrication is possible, and cartridges and cans of this grease are available. If another lubricant is used, you will need to check that it is compatible with the initial lubrication grease.
In special cases, a ball screw assembly with only a preservative coating can be ordered and supplied via the appropriate ordering code.

Note

The selected lubricant must be in the nut before the machine is started.

Note

In systems with a gap-type seal (Option 4), the user must additionally apply the stroke-dependent amount of grease. (See section on Lubrication).

Cleaning

Various cleaning agents can be used to degrease and wash the assembly:
- aqueous cleaning agents
- organic cleaning agents

Note

Immediately after cleaning, thoroughly dry all parts and apply a preservative coating or anti-corrosion oil.
In all cases, take care to observe the appropriate legal regulations (environmental protection, health and safety at work, etc.) as well as the specifications for the cleaning agent (e.g. handling).

Storage

Planetary screw assemblies are high-quality systems that must be treated with due care. In order to prevent damage and contamination, the elements should not be removed from the protective wrapping until immediately before installation. Once they have been removed from the packaging, they must be set down on V-shaped cradles.

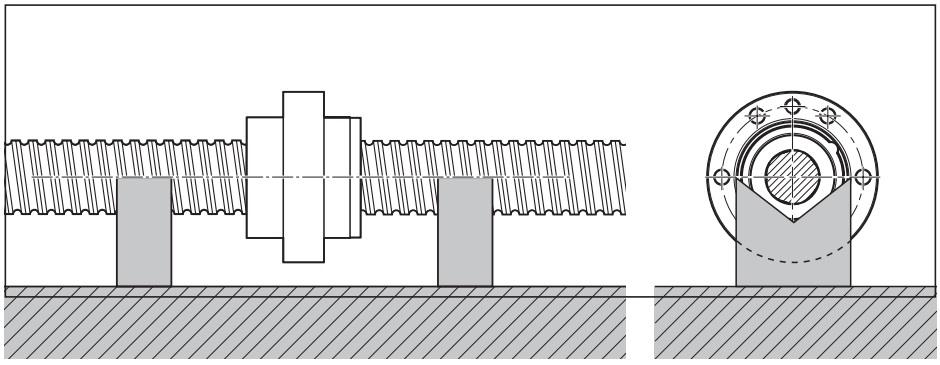

Installation in the machine

It is not normally necessary to remove the preservative coating before installation.
- If the planetary screw assembly is contaminated, it must first be cleaned (see “Cleaning”) and re-oiled
- Push the nut unit into the mounting bore, taking care to avoid any impact force or misalignment.
- Tighten the mounting screws using a torque wrench if necessary. Maximum tightening torque for the steel/steel material pairing ($R_m \geq 370$ N/mm^2), see table.
- For the steel/aluminum and aluminum/aluminum material pairings ($R_m \geq 280$ N/mm^2), the maximum tightening torques specified in the follow table apply.
  When driving screws into aluminum, the length of thread engagement should be at least 1.5 times the screw diameter.

Tightening torques for fastening screws according to VDI 2230 where $\mu_G = \mu_K = 0.125$

Steel/aluminum and aluminum/aluminum material pairings			
Screw diameter (mm)	**Tightening torque** (Nm) **Strength classes as per DIN ISO 898:**		
	8.8	**10.9**	**12.9**
M3	1.2	1.2	1.2
M4	2.4	2.4	2.4
M5	4.8	4.8	4.8
M6	8.5	8.5	8.5
M8	20.0	20.0	20.0
M10	41.0	41.0	41.0
M12	70.0	70.0	70.0
M14	110.0	110.0	110.0
M16	175.0	175.0	175.0
M18	250.0	250.0	250.0
M20	345.0	345.0	345.0

Steel/steel material pairing			
Screw diameter (mm)	**Tightening torque** (Nm) **Strength classes as per DIN ISO 898:**		
	8.8	**10.9**	**12.9**
M3	1.3	1.8	2.1
M4	2.7	3.8	4.6
M5	5.5	8.0	9.5
M6	9.5	13.0	16.0
M8	23.0	32.0	39.0
M10	46.0	64.0	77.0
M12	80.0	110.0	135.0
M14	125.0	180.0	215.0
M16	195.0	275.0	330.0
M18	280.0	400.0	470.0
M20	390.0	560.0	650.0

Mounting screws

⚠ **Always make sure the screws are secure where there are high screw loads!**

Alignment of the planetary screw assembly in the machine

Rexroth can provide a gauge with a self-aligning contact pad for easy alignment of the planetary screw assembly.
Two pads of different lengths are available which can be used depending on the screw lead:
- material no. R3305 131 19: length 33 mm
- material no. R3305 131 21: length 50 mm

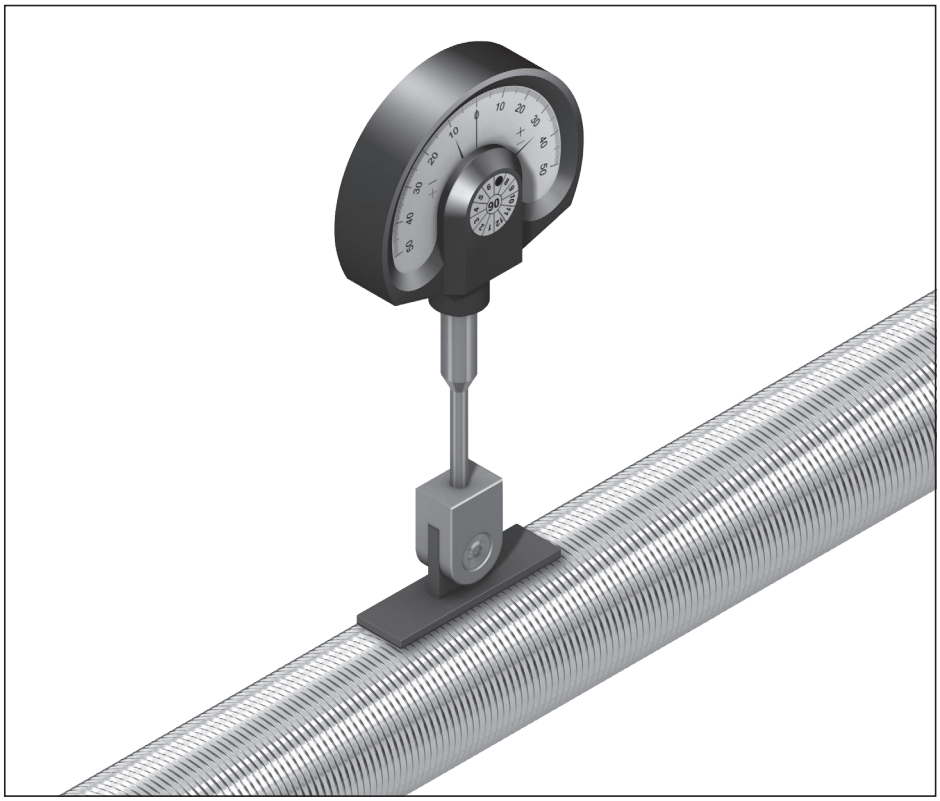

Dial gauge not supplied as standard with the planetary screw assembly

Installation tolerances

To ensure that a PLSA can actually achieve the calculated service life and performance, its system-related requirements and limitations must be taken into account at the design stage. Screw assemblies are not suitable for transferring radial forces and torques, such as may be caused by misalignments during installation. The following sections illustrate the most important principles for achieving designs that will be compatible with the screw drive system and its requirements.

When using PLSAs, the specified installation tolerances must be observed when designing and building the adjoining structures. The first basic principle is: The higher the PLSA's precision and preload, the more accurate the adjoining structures must be.
This applies in particular to applications in which the nut travels close up to the end bearings since, in this area, the risk of distortive stresses and therefore of additional loads is very high.

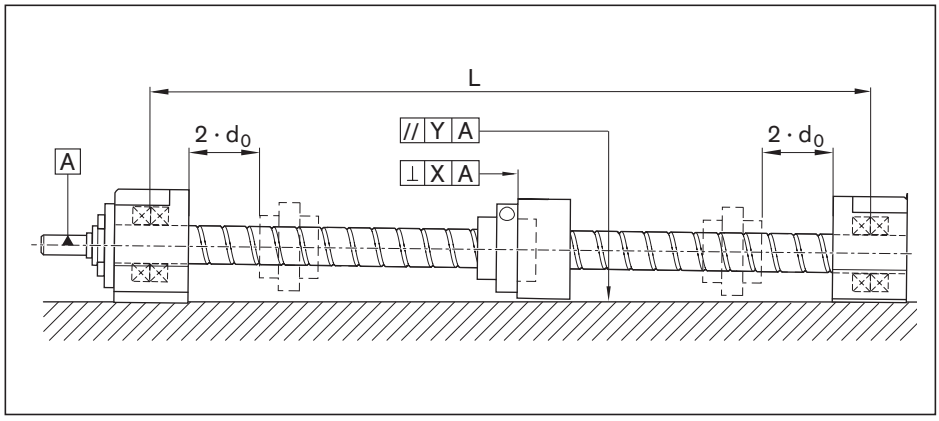

Parallelism offset and details of the rectangularity between the screw shaft axis and the location face of the nut housing.

L = distance between end bearings (mm)
d_0 = nominal diameter of screw (mm)
X = permissible deviation from rectangularity (mm)
The tolerance applies to a surface that must lie between two planes spaced at a distance X from each other which are perpendicular to the reference axis A.
Y = Permissible parallelism offset between the guide and the screw axis (mm)

The table shows the most important recommended tolerances for planetary screw assemblies as a function of the preload. These tolerances include the rectangularity of the nut housing (or adjoining structure) relative to the screw axis. The tolerances for parallelism between the guide and the screw axis must also be complied with.
Any alignment errors can lead to premature breakdown of the planetary screw assembly!

Option	**X**	**Y**
Preload	(mm)	(mm)
Backlash	0.02	0.02
Preload	0.01	0.01

Lubrication

▶ All information on lubrication is based on test values and field experience and are recommendations from Bosch Rexroth..

⚠ Do not use greases containing solid particles (e.g. graphite or MoS_2)!

⚠ If other lubricants are used, this may lead to a reduction in the relubrication intervals, the achievable travel in short-stroke applications, and the load capacities. Possible chemical interactions between the plastic materials, lubricants and preservative oils must also be taken into account.

⚠ If your application makes greater environmental demands (i.e. cleanroom, vacuum, foodstuff application, strong or aggressive metalworking fluids, or extreme temperatures) please contact us, since a special test, and possibly a special lubricant, will be required. Please have all information about your application to hand.

⚠ When using in other sectors, e.g.: food industry, clean room, vacuum etc. or at extreme temperatures, or if the lubrication is exposed to process media, the standard initial lubrication and anti-corrosion agents used prior to shipment may not be suitable, or they may be incompatible with the relubrication lubricant. In this case, please consult us in advance!

⚠ Even under normal operating conditions, the system must be relubricated at the latest after 2 years due to aging of the grease. Please note the reduced load ratings according to the technical notes.

▶ In general, you should not apply the grease all in one go; rather, apply several smaller amounts.

Grease lubrication

Planetary screw assemblies are designed to be lubricated with NLGI Class 2 grease. The advantage of grease lubrication is that the planetary screw assembly can run long distances on one supply of grease.

Lubricating grease

We recommend using Dynalub 510 with the following properties:
- NLGI grade 2 lithium-based high-performance grease as per DIN 51818 (KP2K-20 according to DIN 51825)
- Good water resistance
- Corrosion protection

Under conventional environmental conditions, this ground-fiber, homogeneous grease is ideally suited for the lubrication of linear elements:
- For loads of up to 50% C
- For short-stroke applications ≥ 1 mm
- For the permissible speed range for planetary screw assemblies

The product and material safety data sheets are available on our website at www.boschrexroth.de/brl

Material numbers for Dynalub 510:
- R3416 037 00 (cartridge 400 g)
- R3416 035 00 (hobbock 25 kg)

For more information on Dynalub 510, see Page 168.

Initial lubrication of the PLSA

(Basic lubrication)

Fully assembled PLSAs are prelubricated with Dynalub 510 before shipment. In versions without prelubrication, the initial lubrication quantities according to table 1 must be applied to the nut unit via the lube hole prior to commissioning. Please follow the described procedure.
In versions with a gap-type seal, the stroke-dependent lubrication quantity according to table 1 must additionally be applied when commissioning is carried out.

Relubrication of the planetary screw assemblies

Stroke > nut length L:
If the relubrication interval according to diagram 1 or diagram 2 has been reached, relubricate the amount stated in table 1.

Stroke < nut length L:
Carry out a lubricating stroke on a regular basis (if possible)! Reducing the relubrication interval according to table 1 by a factor of at least 3 means that the relubrication quantity can be reduced by the same factor. Please follow the described procedure.

d_0 x P	**Lubricant quantity** (cm^3)			
	Gap-type seal/cover plate wiper		**Lip seal**	
	Initial lubrication	**Relubrication**	**Initial lubrication**	**Relubrication**
20 x 5	$10 + L_s / 115$	$5 + L_s / 115$	10	5.0
25 x 5/10	$10 + L_s / 90$	$5 + L_s / 90$	10	5.0
30 x 5/10	$20 + L_s / 75$	$10 + L_s / 75$	20	10.0
39 x 5/10	$35 + L_s / 60$	$17{,}5 + L_s / 60$	35	17.5
48 x 5/10	$50 + L_s / 50$	$25 + L_s / 50$	50	25.0
60 x 10/20	$150 + L_s / 40$	$75 + L_s / 40$	150	75.0
75 x 10/20	$250 + L_s / 30$	$125 + L_s / 30$	250	125.0

table 1

L_s = stroke length (mm)
The nut is prelubricated; the stroke-dependent quantity of grease must be applied before the assembly is commissioned.
Apply the stated quantity of grease through the nut unit in several partial amounts. The nut unit must be moved through the full stroke during this process.
Conditions:
- Temperature ≤ 60 °C
- Relubrication interval applies as long as the lubricant is not spun off by the screw or removed.

Load-dependent relubrication intervals

s = relubrication interval (10^6 revs.)
F_m = equivalent dynamic axial load (N)
C = dynamic load capacity (N)
d_0 = nominal diameter (mm)

Relubrication interval for gap-type seal/wiper

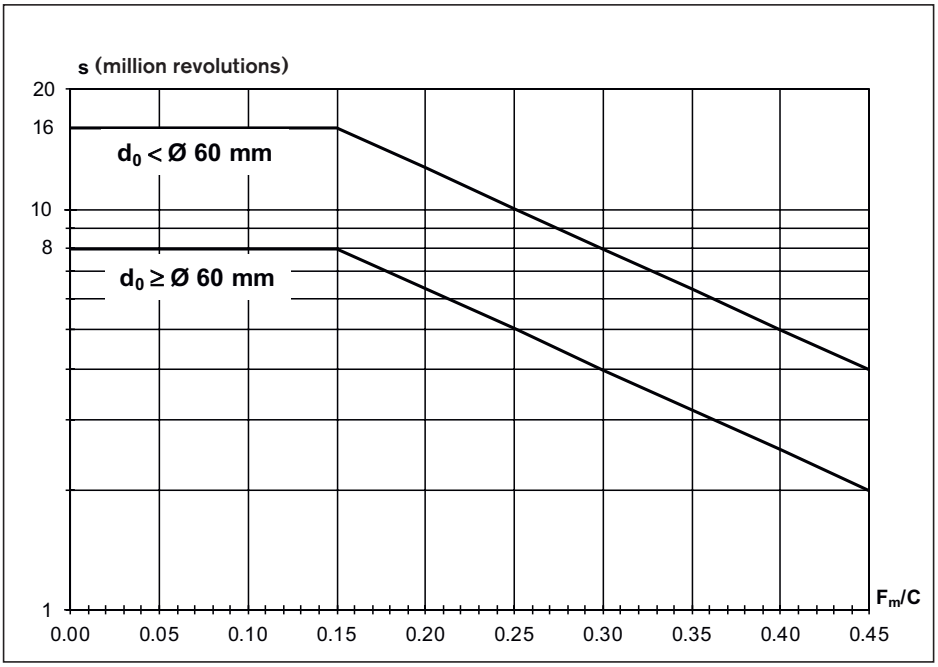

diagramm 1

Relubrication interval for lip-type seal

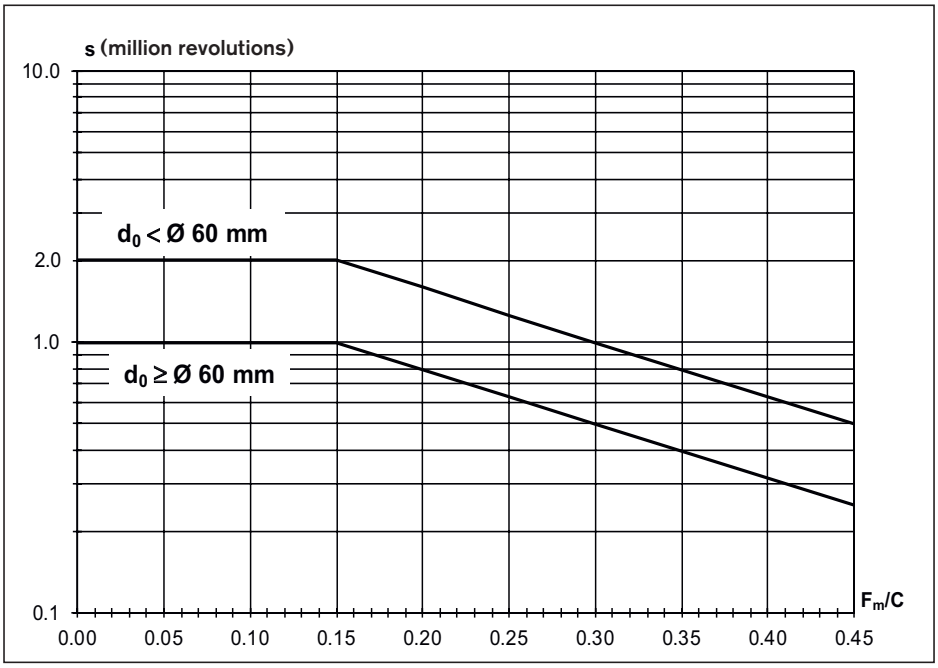

diagramm 2

Oil lubrication

Oil lubricant
We recommend using Shell Tonna S 220, which has the following properties:
- Special demulsifying oil CLP or CGLP as per DIN 51517-3 for machine bed tracks and tool guides
- A blend of highly refined mineral oils and additives
- Can be used even when mixed with significant quantities of metalworking fluids

We recommend using piston distributors from SKF. These should be installed as close as possible to the lube ports of the nut units. Long lines and small line diameters should be avoided, and the lines should be laid on an upward slant.

Initial lubrication of the PLSA
(Basic lubrication)
Fully assembled PLSAs are prelubricated with Dynalub 510 before shipment. In versions without prelubrication, the initial lubrication quantities according to table 3 must be applied to the nut unit via the lube hole.
Please follow the described procedure. When using single-line distributor systems, care should be taken that all lines and the piston distributors (including the connection to the nut unit) are filled before performing basic lubrication or relubrication.

Position specification
Lube hole: The connection should be at the top wherever possible (horizontal mounting orientation).

Relubrication of the planetary screw assemblies
Apply the relubrication quantity according to table 2 to the lube port when the specified relubrication interval has been reached.
The pulse count can be calculated as the quotient (rounded to the next whole figure) of the relubrication quantity and the piston distributor size.
The lubricant cycle time can then be obtained by dividing the relubrication interval by the calculated pulse count.

d_0 x P	**Lubricant quantity** (cm^3) **Gap-type seal/cover plate wiper/ lip seal**	
	Initial lubrication	**Relubrication**
20 x 5	2.7	1.4
25 x 5/10	3.0	1.5
30 x 5/10	3.5	1.8
39 x 5/10	12.0	6.0
48 x 5/10	20.0	10.0
60 x 10/20	50.0	25.0
75 x 10/20	80.0	40.0

table 2

Load-dependent relubrication intervals

Apply the oil quantity via the nut unit. The nut unit must be traversed during this process.
Conditions:
- Temperature ≤ 60 °C
- Relubrication interval applies as long as the lubricant is not spun off by the screw or removed.
- For gap-type seals / Wiper, horizontal mounting only.

s = relubrication interval (10^6 revs.)
F_m = equivalent dynamic axial load (N)
C = dynamic load capacity (N)
d_0 = nominal diameter (mm)

Oil relubrication interval

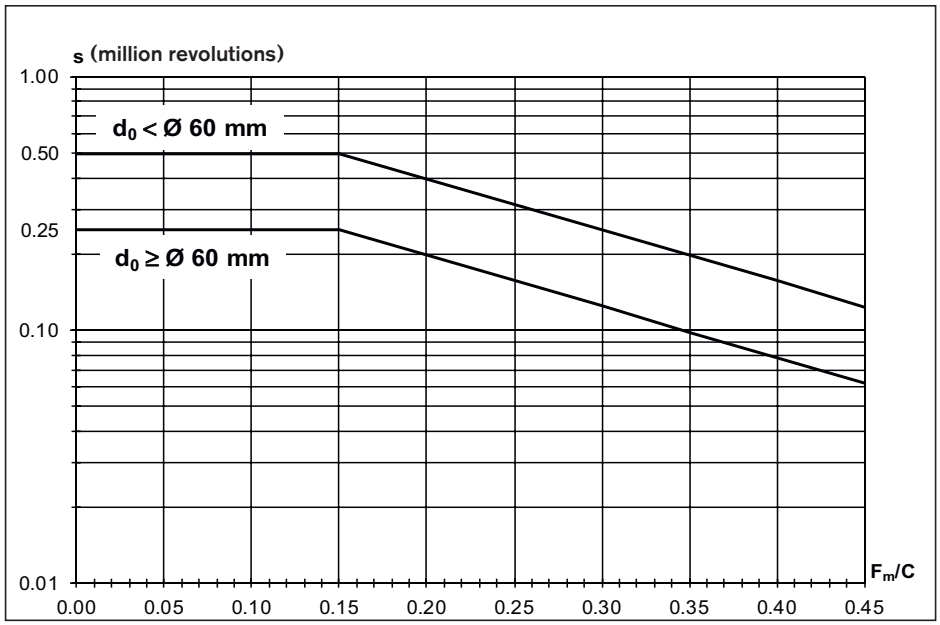

diagramm 3

Calculation

On request, we can perform all calculations to your specifications.

See section “Design Calculation Service Form” on page 276

Average speed and average load

Where the operating conditions vary (fluctuating speed and load), the service life must be calculated using the average values $\mathbf{F_m}$ and $\mathbf{n_m}$.

– Where the speed fluctuates, the average speed $\mathbf{n_m}$ is calculated as follows:

$$n_m = \frac{|n_1| \cdot q_{t1} + |n_2| \cdot q_{t2} + \ldots + |n_n| \cdot q_{tn}}{100\%} \quad (1)$$

The following applies to the effective equivalent bearing load:

$$|F_n| > 2.8 \cdot F_{pr} \qquad F_{eff\,n} = |F_n|$$

$$|F_n| \leq 2.8 \cdot F_{pr} \qquad F_{eff\,n} = \left(\frac{|F_n|}{2.8 \cdot F_{pr}} + 1\right)^{\frac{3}{2}} \cdot F_{pr}$$

d_0 x P	F_{pr} (N)
20 x 5	1,180
25 x 5	1,580
25 x 10	1,010
30 x 5	1,840
30 x 10	1,470
39 x 5	2,290
39 x 10	1,960
48 x 5	2,700
48 x 10	2,410
60 x 10	2,910
60 x 20	2,320
75 x 10	3,800
75 x 20	3,000

– where the load fluctuates and the speed is constant, the equivalent dynamic axial load $\mathbf{F_m}$ is calculated as follows:

$$F_m = \sqrt[3]{\left|F_{eff\,1}\right|^3 \cdot \frac{q_{t1}}{100\%} + \left|F_{eff\,2}\right|^3 \cdot \frac{q_{t2}}{100\%} + \ldots + \left|F_{eff\,n}\right|^3 \cdot \frac{q_{tn}}{100\%}} \quad (2)$$

– Where both the load and the speed fluctuate, the equivalent dynamic axial load $\mathbf{F_m}$ is calculated as follows:

$$F_m = \sqrt[3]{\left|F_{eff\,1}\right|^3 \cdot \frac{|n_1|}{n_m} \cdot \frac{q_{t1}}{100\%} + \left|F_{eff\,2}\right|^3 \cdot \frac{|n_2|}{n_m} \cdot \frac{q_{t2}}{100\%} + \ldots + \left|F_{eff\,n}\right|^3 \cdot \frac{|n_n|}{n_m} \cdot \frac{q_{tn}}{100\%}} \quad (3)$$

$F_{eff\,1}$, $F_{eff\,2}$, ... $F_{eff\,n}$	=	effective equivalent axial load during phases 1 ... n	(N)
$F_{eff\,n}$	=	effective equivalent axial load during phase n	(N)
F_m	=	equivalent dynamic axial load	(N)
F_n	=	axial load during phase n	(N)
F_{pr}	=	internal axial load on the nut unit due to the preload	(N)
n_1, n_2, ... n_n	=	speeds in phases 1 ... n	(rpm)
n_m	=	average speed	(rpm)
q_{t1}, q_{t2}, ... q_{tn}	=	discrete time step in phases 1 ... n	(%)

Nominal service life

Service life in revolutions L

$$L = \left(\frac{C}{F_m}\right)^3 \cdot 10^6 \quad (4) \rightarrow C = F_m \cdot \sqrt[3]{\frac{L}{10^6}} \quad (5) \rightarrow F_m = \frac{C}{\sqrt[3]{\frac{L}{10^6}}} \quad (6)$$

Service life in hours L_h

$$L_h = \frac{L}{n_m \cdot 60} \quad (7)$$

$$L_{h\ machine} = L_h \cdot \frac{DC_{machine}}{DC_{PLSA}} \quad (8)$$

Drive torque and drive power

Drive torque M_{ta}
for conversion of rotary motion into linear motion:

$$M_{ta} = \frac{F_L \cdot P}{2{,}000 \cdot \pi \cdot \eta} \quad (9)$$

$$M_{ta} \leq M_p$$

Transmitted torque M_{te}
for conversion of linear motion into rotary motion:

$$M_{te} = \frac{F_L \cdot P \cdot \eta'}{2{,}000 \cdot \pi} \quad (10)$$

$$M_{te} \leq M_p$$

The dynamic drag torque must be taken into account for preloaded nut units.

Drive power P_a

$$P_a = \frac{M_{ta} \cdot n}{9{,}550} \quad (11)$$

C	=	dynamic load rating	(N)
$DC_{machine}$	=	duty cycle of the machine	(%)
DC_{PLSA}	=	duty cycle of the PLSA	(%)
F_L	=	thrust force	(N)
F_m	=	equivalent dynamic axial load	(N)
L	=	nominal service life in revolutions	(–)
L_h	=	nominal service life of the PLSA	(h)
$L_{h\ machine}$	=	nominal service life of the machine	(h)
M_p	=	maximum permissible drive torque	(Nm)
M_{te}	=	transmitted torque	(Nm)
M_{ta}	=	drive torque	(Nm)
n	=	speed	(rpm)
n_m	=	average speed	(rpm)
P	=	lead	(mm)
P_a	=	drive power	(kW)
η	=	mech. efficiency ($\eta \approx 0.8$)	(–)
η'	=	mech. efficiency ($\eta' \approx 0.7$)	(–)

⚠ With critical applications, you must pay attention to the information below.

Static load safety factor S_0
You must verify mathematically any structural design involving rolling contact with regard to the static load safety factor.

In this connection, $F_{0\,max}$ represents the maximum load amplitude that can occur, which can affect the screw drive.
It does not matter whether this load is exerted only for a short period.
It may represent the peak amplitude of an overall dynamic loading.
For design purposes, the data shown in the table applies.

$$S_0 = C_0 / (F_{0\,max}) \quad (12)$$

C_0 = Static load rating (N)
$F_{0\,max}$ = Maximum static load (N)
S_0 = Static load safety factor (-)

Design of the static load safety factor in relation to the operating conditions

Operating conditions	Static load safety factor S_0
Overhead arrangements and applications representing a high hazard potential	≥ 12
High dynamic load when at standstill, contamination.	8 - 12
Normal design of machinery and plant without full knowledge of the load parameters or connection details.	5 - 8
Full knowledge of all the load data. Vibration-free operation is ensured.	3 - 5

If there are health and safety hazards, protection against falling loads must be provided.

Calculation example service life

Proposed PLSA: 30 x 5, tolerance grade T5

Operating conditions
The service life of the machine should be 40,000 operating hours with the PLSA operating 60% of the time.

F_1	=	50,000 N	at	n_1 =	10 rpm	for	q_1 =	6% of the duty cycle
F_2	=	25,000 N	at	n_2 =	30 rpm	for	q_2 =	22% of the duty cycle
F_3	=	8,000 N	at	n_3 =	100 rpm	for	q_3 =	47% of the duty cycle
F_4	=	2,000 N	at	n_4 =	1,000 rpm	for	q_4 =	25% of the duty cycle
								100%

Calculation procedure

Average torque n_m

$$n_m = \frac{6}{100} \cdot |10| + \frac{22}{100} \cdot |30| + \frac{47}{100} \cdot |100| + \frac{25}{100} \cdot |1000| \quad (1)$$

$n_m = 304$ rpm

Equivalent dynamic axial load F_m for variable load and variable speed

$$F_m = \sqrt[3]{|50000|^3 \cdot \frac{|10|}{304} \cdot \frac{6}{100} + |25000|^3 \cdot \frac{|30|}{304} \cdot \frac{22}{100} + |8000|^3 \cdot \frac{|100|}{304} \cdot \frac{47}{100} + |2000|^3 \cdot \frac{|1000|}{304} \cdot \frac{25}{100}} \quad (3)$$

$F_m = 8\,757$ N

Required service life **L** (revolutions)
The service life **L** can be calculated by transposing formulas (7) and (8):

$$L = L_h \cdot n_m \cdot 60$$

$$L_h = L_{h\,machine} \cdot \frac{DC_{PLSA}}{DC_{machine}}$$

$$L_h = 40{,}000 \cdot \frac{60}{100} = 24{,}000 \text{ h}$$

$$L = 24{,}000 \cdot 304 \cdot 60$$

$L = 437{,}760{,}000$ revolutions

Basic dynamic load rating **C**

$$C = 8\,757 \cdot \sqrt[3]{\frac{437\,760\,000}{10^6}} \quad (5) \qquad C \approx 66\,492 \text{ N}$$

Result and selection
Now a selection can be made from the dimension tables:

e.g. PLSA, size 30 x 5 R, with single nut with flange FEM-E-S, and screw in tolerance grade T5.
Dyn. load rating C = 87 KN.

⚠ **Take into account correction factor f_{ac} of the tolerance grade! See page 255.**

Attention:
Take into account the dynamic load rating of the screw end bearing used!

Cross-check
Now the following can be selected from the product tables:

Size 30 x 5 R

Backlash | **Preload**

FEM-E-S, with preload class C0
Load capacity Cdyn. = 87,000 N
Correction factor f_{ac} = 1.0
Cross-check
Service life of the selected ball screw drive in revolutions

$$L = \left(\frac{1.0 \cdot 87\,000}{8\,757}\right)^3 \cdot 10^6$$

$L \approx 981 \cdot 10^6$ revolutions

Service life in hours L_h

$$L_h = \frac{981 \cdot 10^6}{304 \cdot 60}$$

$L_h \approx 53{,}760$ hours

FEM-E-S, with preload class C2
Load capacity $C_{dyn.}$ = 87,000 N
Correction factor f_{ac} = 1.0
Cross-check
The following applies to the effective equivalent bearing load:

$$|F_n| > 2.8 \cdot F_{pr} \qquad F_{eff\,n} = |F_n|$$

$$|F_n| \leq 2.8 \cdot F_{pr} \qquad F_{eff\,n} = \left(\frac{|F_n|}{2.8 \cdot F_{pr}} + 1\right)^{\frac{3}{2}} \cdot F_{pr}$$

$F_{eff\,n}$ = effective equivalent axial load during phase n (N)
F_n = axial load during phase n (N)
F_{pr} = internal axial load on the nut unit due to the preload (N)

$2.8 \times F_{pr} = 2.8 \times 1.840\ N = 5152\ N$

- $F_1 = 50{,}000\ N > 5{,}152\ N \Rightarrow F_{eff1} = 50{,}000\ N$
- $F_2 = 25{,}000\ N > 5{,}152\ N \Rightarrow F_{eff2} = 25{,}000\ N$
- $F_3 = 8{,}000\ N > 5{,}152\ N \Rightarrow F_{eff3} = 8{,}000\ N$
- $F_4 = 2{,}000\ N < 5{,}152\ N \Rightarrow F_{eff4} = \left(\frac{2{,}000}{5{,}152} + 1\right)^{1.5} \cdot 1{,}840 \cdot N = 3{,}010\ N$

$$F_m = \sqrt[3]{|50000|^3 \cdot \frac{|10|}{304} \cdot \frac{6}{100} + |25000|^3 \cdot \frac{|30|}{304} \cdot \frac{22}{100} + |8000|^3 \cdot \frac{|100|}{304} \cdot \frac{47}{100} + |3010|^3 \cdot \frac{|1000|}{304} \cdot \frac{25}{100}}$$

$F_m = 8{,}826\ N$

$$L = \left(\frac{1.0 \cdot 87{,}000}{8{,}826}\right)^3 \cdot 10^6 = 957 \cdot 10^6 \text{ revolutions}$$

$$L_h = \frac{957 \cdot 10^6}{304 \cdot 60} = 52{,}467 \text{ hours}$$

The service life of both PLSAs (with standard backlash/with standard preload) exceeds the required service life of 40,000 x 60% = 24,000 hours. The selection of a smaller PLSA is consequently possible, subject to a review of it being undertaken.

Critical speed n_{cr}

The critical speed n_{cr} depends on the diameter of the screw, the type of end fixity, and the free length l_{cr}. No allowance must be made for guidance by a nut with backlash. The operating speed should not reach more than 80% of the critical speed. The characteristic speed and the max. permissible linear speed must be taken into account, see “Technical Notes”.

Example

Screw diameter = 30 mm
Length l_c = 1,200 mm
End fixity II (fixed bearing - floating bearing)

According to the graph, the critical speed is 3,900 rpm.
The permissible operating speed is 3,900 rpm x 0.8 = 3,120 rpm.

The maximum operating speed in our calculation example of n_4 = 1,000 rpm is therefore below the permissible operating speed.

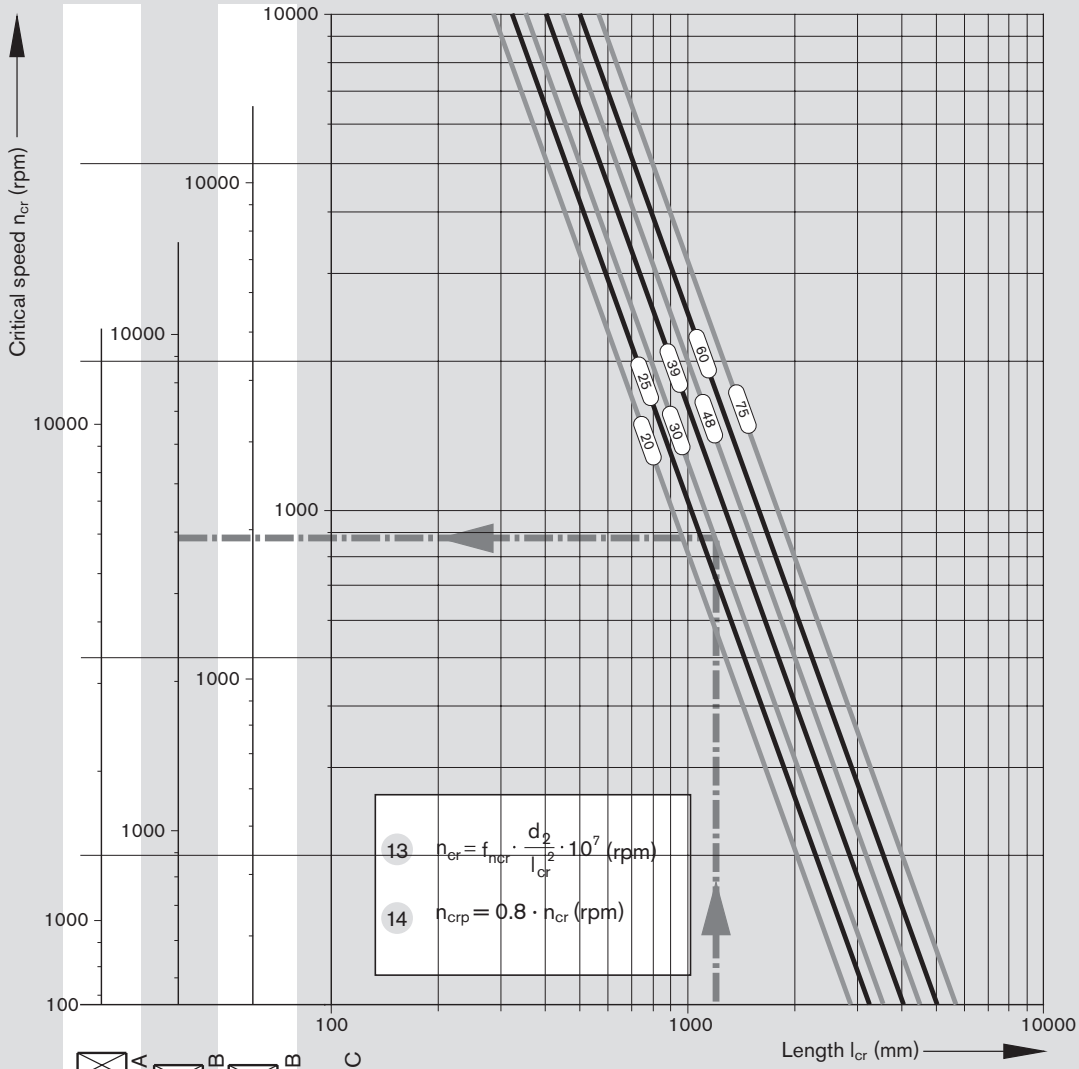

End fixity:

A = fixed bearing
B = floating bearing
C = without bearing

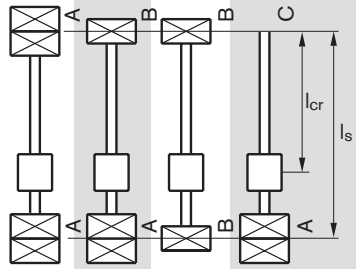

End fixity	I	II	III	IV
f_{ncr} - value	27.4	18.9	12.1	4.3

n_{cr}	=	Critical speed	(rpm)
n_{crp}	=	Permissible operating speed	(rpm)
f_{ncr}	=	Coefficient determined by bearing	
d_2	=	Root diameter of screw (see dimension tables)	(mm)
l_{cr}	=	Critical length for preloaded nut systems	(mm)
l_s	=	Bearing - bearing distance	(mm)

For non-preloaded nut systems $l_cr = l_s$
For screw ends Form 312, 612, 622, the end fixity can be assumed to be “fixed”

Permissible axial load on screw F_c (buckling load)

The permissible axial load on the screw F_c depends on the diameter of the screw, the type of end fixity, and the effective unsupported length l_c.

A safety factor of $s \geq 2$ must be taken into consideration when determining the permissible axial load.

Example

Screw diameter = 30 mm,
Length l_c = 1,200 mm
End fixity IV (fixed bearing - floating bearing)

According to the graph, the theoretically permissible axial load is 115 kN.
Applying the safety factor 2 yields a permissible axial load on the screw in operation of
115 kN : 2 = 57.5 kN.

This therefore lies above the maximum operating load of F_1 = 50 kN used in our calculation example.
For more information on buckling, see next page.

15	$F_c = f_{Fc} \cdot \frac{d_2^4}{l_c^2} \cdot 10^4$ (N)
16	$F_{cp} = \frac{F_c}{2}$ (N)

F_c = Theoretically permissible axial load on screw
F_{cp} = Permissible axial load on screw during operation (N)
f_{Fc} = Corrector value determined by bearing
d_2 = Root diameter of screw, see dimension tables (mm)
l_c = unsupported thread length

End fixity:	coefficient f_{Fc}	
	nut fixed	nut floating
A – A 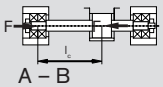 A – B 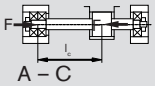 A – C 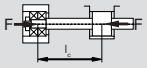	End fixity I 39.7	End fixity IV 20.3
B – B 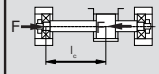	End fixity II 20.3	End fixity V 9.9
A – C 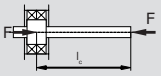	End fixity III 2.5	
A – C 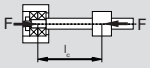		End fixity VI 2.5

End fixity:

A = fixed bearing
B = floating bearing
C = without bearing

f_{Fc} value	End fixity
2.5	III / VI
9.9	V
20.3	II / IV
39.7	I

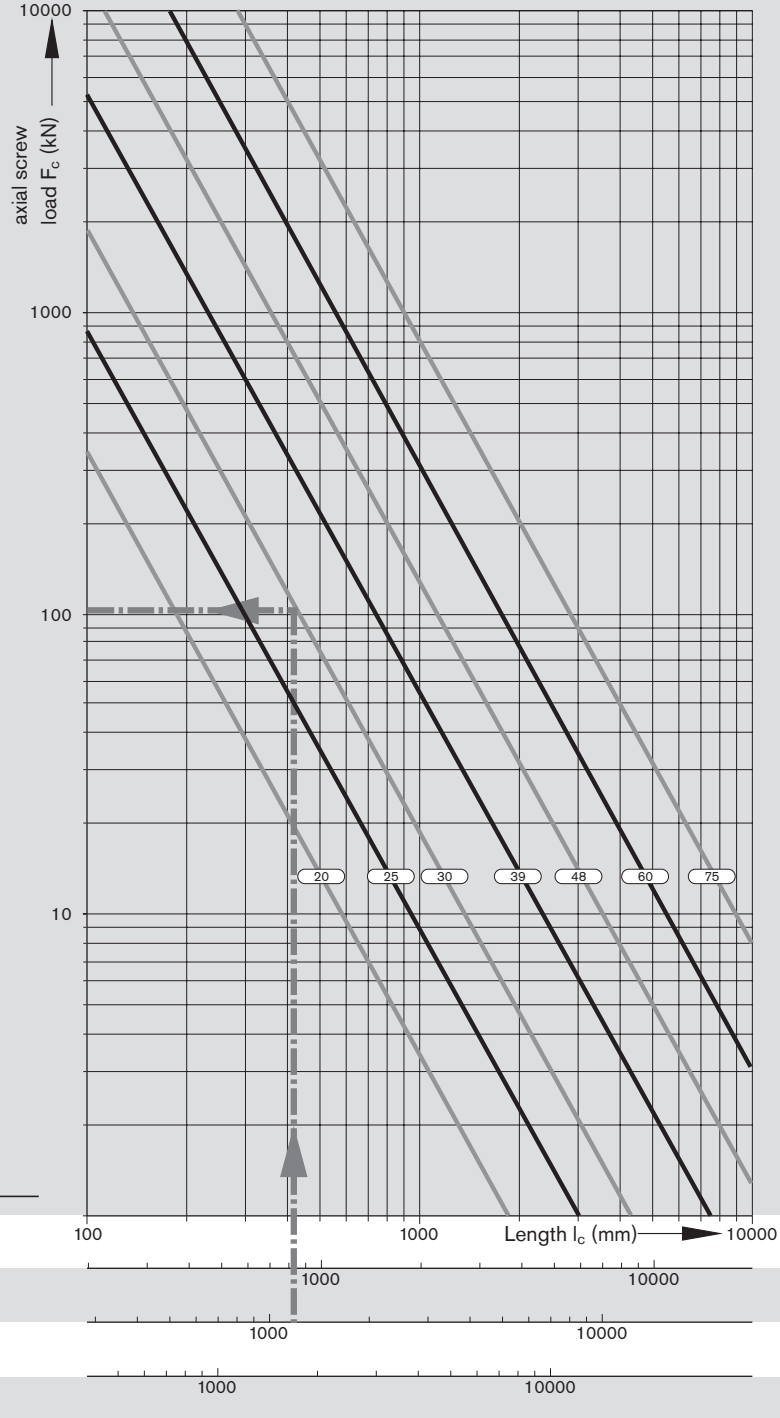

Notes on buckling

The effective buckling length l_c of the screw is the maximum unsupported screw length in the direction of the force's flow between the nut unit and the fixed bearing (center-to-center distance) or between the nut unit and the screw end.

For buckling load calculations, the nut is taken into consideration as a bearing.

For "nut fixed," the following conditions must be met:
- zero-backlash nut,
- rigid attachment of the nut to the linear guide,
- the nut unit is not subjected to moment loads, i.e. a linear guide absorbs any arising moments,
- no distortive stresses due to external factors (for example, temperature).

If one or more of the conditions for "nut fixed" are not met, the appropriate coefficients for "nut floating" must be used instead.

Case III occurs in applications with driven nuts, for example, when the nut is stationary and the screw rotates. The nut can then be regarded as a fixed bearing.
Case VI arises only when the nut unit is not supported by any linear guide.

End Bearings

Design notes, installation

Bearing design
For customer-machined screw ends, please consider the design notes given for screw ends and housings.
For Rexroth screw end designs, see "End Machining Details."
Rexroth delivers complete drive systems, including the end bearings. Calculations are performed with the formulas used in the antifriction bearing industry.

Housing

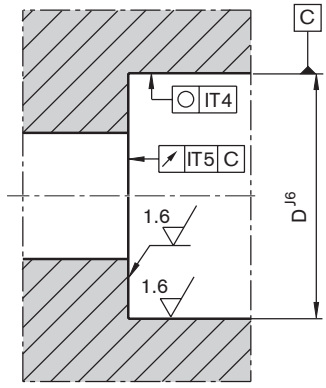

Mounting

Angular-contact thrust ball bearings and deep-groove ball bearings
When mounting the angular-contact thrust ball bearings LGF and LGN, ensure that the mounting forces are exerted only on the bearing rings. Never apply mounting forces via the anti-friction bearing elements or the seal rings! The two sections of the inner raceway may not be separated during assembly or disassembly for any reason! Tighten the mounting screws for screw-down or flange-mounted bearings in cross-wise sequence. The mounting screws may be subjected only to tension amounting to a maximum of 70% of their yielding point.
The screw-down (LGF) bearings have a groove on the cylindrical surface of the outer raceway for disassembly. The individual bearings of the bearing pair series LGF-C... and LGN-C... are marked on the cylindrical surfaces of the outer raceways (see Figure). The markings reveal the bearing sequence. The sealing rings should face outwards after proper mounting.

Outer raceway markings for paired bearings

Slotted nut

The bearings are preloaded by tightening the nuts.
In order to prevent settling phenomena, we recommend first tightening the slotted nut by twice the value of the tightening torque M_A and then easing the load. Only then should the slotted nut be retightened to the specified tightening torque M_A.
The two set screws are then alternately tightened using a hexagon socket wrench. The components are disassembled in the reverse order, i.e. the set screws have to be removed before the slotted nut.
The slotted nuts can be used several times when properly assembled and disassembled by competent personnel. The inner raceways of the bearings are dimensioned in such a way as to achieve a defined bearing preload sufficient for most applications when the slotted nut is tightened (M_A in accordance with Dimension Table).

Design Note

For counter holding the tightening torque MA of the slotted nut we recommend a wrench flat on the spindle or a hexagon socket on the end face of the spindle.

Lubrication of the end bearings

Bearings for planetary screw assemblies are lubricated with grease for a lifetime of reliable service. It should be noted, however, that grease lubrication does not facilitate the dissipation of heat in the bearings. The bearing temperature should therefore not exceed 50 °C, particularly in machine tool applications. At higher temperatures circulating oil lubrication must be set up. Angular-contact thrust ball bearings of series LGF, LGN are lifetime-lubricated with KE2P-35 grease as per DIN 51825. For regreasing, the quantities stated in the table below can be applied via the lube ports provided on the bearings. Where there are pairs of bearings, please note that each bearing must be individually lubricated via the lube port. Each bearing must be lubricated with half the value shown in the table.The maximum interval can be assumed to be 350 million revolutions, in which case the larger of the two quantities should be used. As a rule, the initial grease quantity will therefore last for the entire service life of a planetary screw assembly.

Relubrication quantities for angular-contact thrust ball bearings

Abbreviation		Quantity (cm^3)		Abbreviation		Quantity (cm^3)	
			1)		2)		1)
LGN-B-1545	LGF-B-1560	0.49	0.38				
				LGN-C-2052	LGF-C-2068	1.74	1.09
				LGN-C-3062	LGF-C-3080	2.17	1.30
				LGN-C-3572	LGF-C-3590	3.48	1.96

1) Shortened lubricating interval max. 10 M revolutions
2) Where there are pairs of bearings, lubricate each bearing via the lube port.
Lubricate each bearing with half the value shown in the table.

Resulting and equivalent bearing loads

For angular-contact thrust ball bearings LGN and LGF6

Angular-contact thrust ball bearings are preloaded. The chart shows the resulting axial bearing load F_{ax} as a function of preload and axial operating load F_{Lax}.
For a purely axial load $F_{comb} = F_{ax}$.

$\alpha = 60°$	X	Y
$\frac{F_{ax}}{F_{rad}} \leq 2.17$	1.90	0.55
$\frac{F_{ax}}{F_{rad}} > 2.17$	0.92	1.00

α = pressure angle
F_{ax} = resulting bearing load
F_{Lax} = operating load
X, Y = dimensionless factor

If the radial operating forces are not insignificant, the equivalent bearing loads are calculated according to formula 20.
Bearings for planetary screw assemblies are also able to accommodate tilting moments. The moments that usually occur due to the weight and drive motion of the screw do not generally need to be incorporated into the calculation of the equivalent bearing load.

$$F_{comb} = X \cdot F_{rad} + Y \cdot F_{ax} \quad (20)$$

F_{ax} = resulting axial bearing load (N)
F_{comb} = combined equivalent bearing load (N)
F_{rad} = radial bearing load (N)

Internal preload limit and resulting bearing load

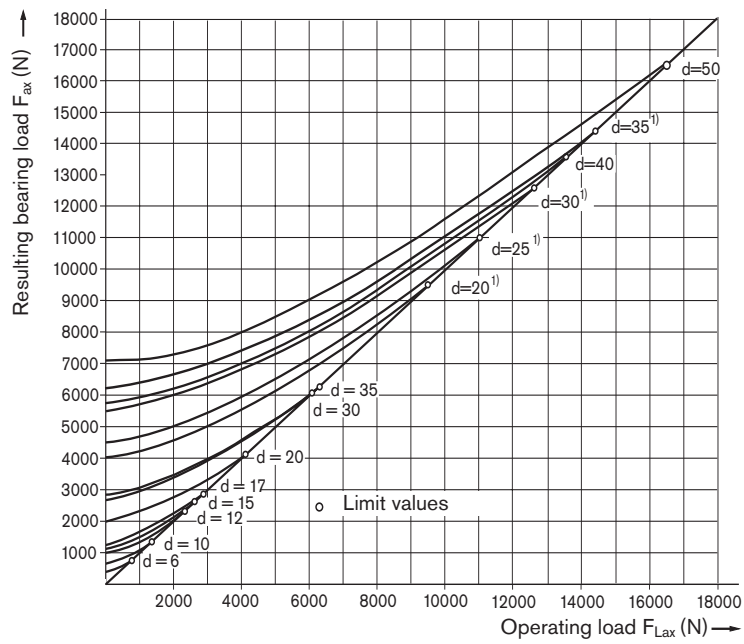

1) Four row version

⚠ **Separate technical dimensioning to determine the limit values is absolutely necessary for all attachments (e.g. pillow block units, bearing assembly, etc.)**

Permissible static axial load for bearing series LGF

The permissible static axial load of LGF series bearings in screw-down direction is:

$$F_{0ax\ p} \leq \frac{C_0}{2}$$

The static axial load rating C_0 is stated in the Dimension Tables.

Average speed and average bearing load

When the bearing load varies in steps over a specific period of time 22, calculate the dynamic equivalent bearing load.
When the speed varies, use formula 23. In these formulas q_t denotes the discrete time steps for the individual phases in %.

$$F_m = \sqrt[3]{F_{comb1}^{\ 3} \cdot \frac{|n_1|}{n_m} \cdot \frac{q_{t1}}{100} + F_{comb2}^{\ 3} \cdot \frac{|n_2|}{n_m} \cdot \frac{q_{t2}}{100} + \ldots + F_{combn}^{\ 3} \cdot \frac{|n_n|}{n_m} \cdot \frac{q_{tn}}{100}} \quad 22$$

$$n_m = \frac{q_{t1}}{100} \cdot |n_1| + \frac{q_{t2}}{100} \cdot |n_2| + \ldots + \frac{q_{tn}}{100} \cdot |n_n| \quad 23$$

Service life and load safety factor

$$L = \left(\frac{C}{F_{comb}}\right)^3 \cdot 10^6 \quad 24$$

Nominal service life

The nominal service life is calculated as follows:

$$L_h = \frac{16\ 666}{n_m} \cdot \left(\frac{C}{F_{comb}}\right)^3 \quad 25$$

Attention:
take the dynamic load rating of the nut into account!

Static load safety factor

The static load safety factor for machine tools should not be lower than 4.

$$S_0 = \frac{C_0}{F_{0max}} \quad 26$$

C	=	dynamic bearing load rating	(N)
$F_{0ax\ p}$	=	permissible static axial bearing load	(N)
F_{comb}	=	combined equivalent bearing load	(N)
F_{comb1} ... F_{combn}	=	combined equivalent axial load in phases 1 ... n	(N)
F_m	=	equivalent dynamic axial bearing load	(N)
L	=	nominal service life in revolutions	(–)
L_h	=	nominal service life in operating hours	(h)
n_1 ... n_n	=	speeds in phases 1 ... n	(rpm)
n_m	=	average speed	(rpm)
q_{t1} ... q_{tn}	=	discrete time steps in phases 1 ... n	(%)

Bosch Rexroth
Linear Motion Technology

97419 Schweinfurt / Germany

Company: _____
Contact: _____
E-mail: _____
Telephone: _____

Find your local contact person here: www.boschrexroth.com/adressen

Application

New design ☐ Revised design ☐

Operating conditions

Discrete time step parameters			or	Dynamic cycle parameters												
Discrete time steps (%)	**Speed** (1/min)	**Action of force x**	**Section**	**T1**	**T2**	**T3**	**T4**	**T5**	**T6**	**T7**	**T8**	**T9**	**T10**	**T11**	**T12**
T_1 =	n_1 =		**Path** (mm)												
T_2 =	n_2 =		**V** (m/s)												
T_3 =	n_3 =		**a** (m/s^2)												
T_4 =	n_4 =		**Time** (s)												
T_5 =	n_5 =		**Action of force x**												
T_6 =	n_6 =														

	F1	F2	F3	F4	F5	F6
Forces (N) =						
Mass (kg) =						
Max. stroke (mm) =						

Bearing type

1. ☐ Tight

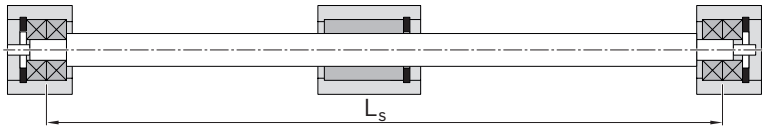

Tight

Installation Position
Horizontal ☐
Vertikal ☐

2. ☐ Tight

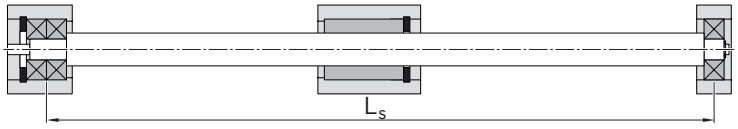

Loose

Drawing enclosed (recommended) ☐

3. ☐ Tight

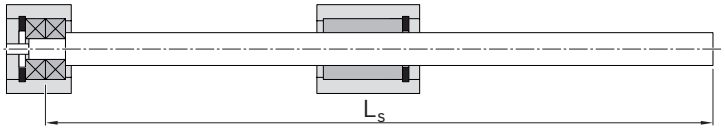

Free

Delivery with bearing ☐

Required life: Operating temperature: °C Up to °C

Type of lubrication:

Short description of the application / unusual operating conditions:

Visit out official homepage and use the provided configurators and our dimensioning program Linear Motion Designer free of charge.

Further information

Bosch Rexroth Linear Motion Technology homepage:
https://www.boschrexroth.com/en/xc/products/product-groups/linear-motion-technology/index

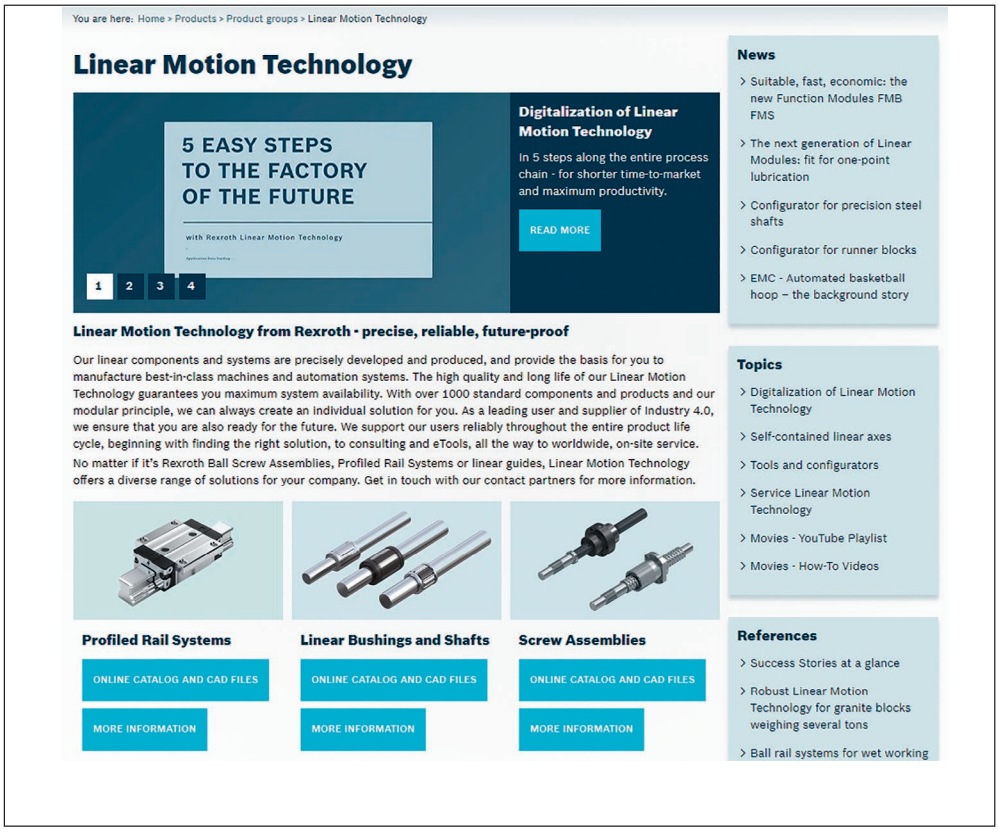

Configurators and tools
https://www.boschrexroth.com/en/xc/products/engineering/econfigurators-and-tools/econfigurators

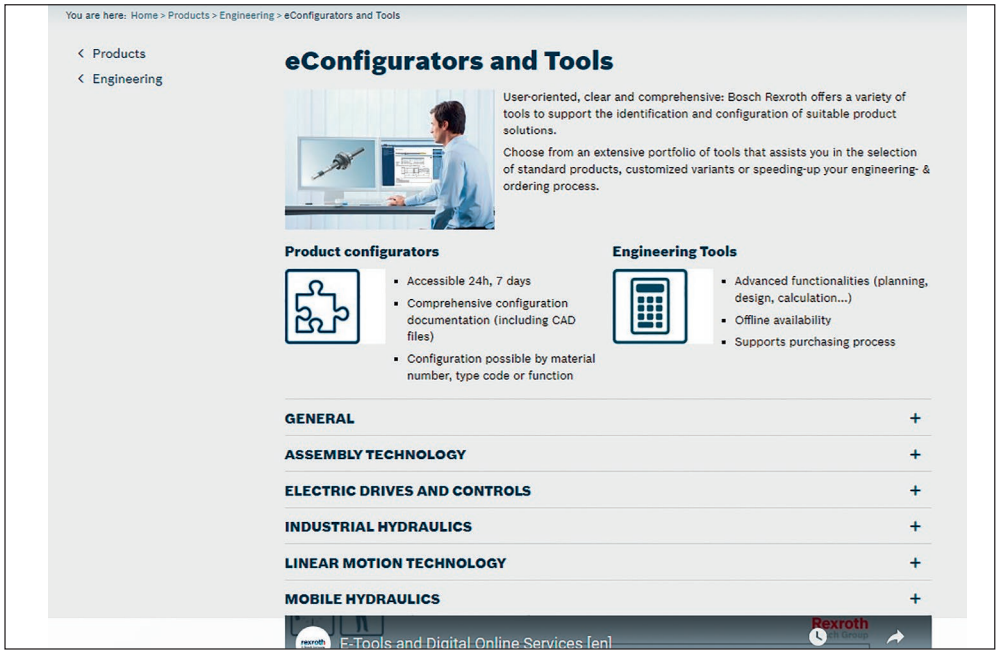

GoTo Europe

http://www.boschrexroth.com/goto

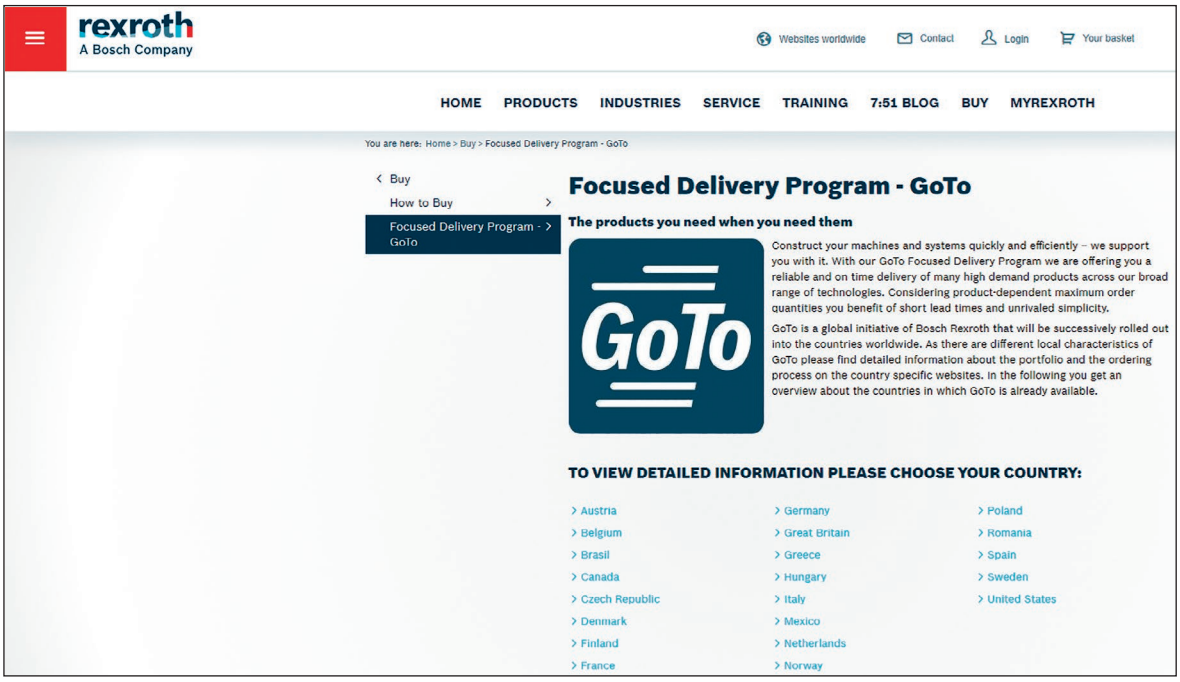

How-to: Linear Motion Technology

https://www.youtube.com/playlist?list=PLRO3LeFQeLyMF6evW4E7kR93JHzpJlV4r

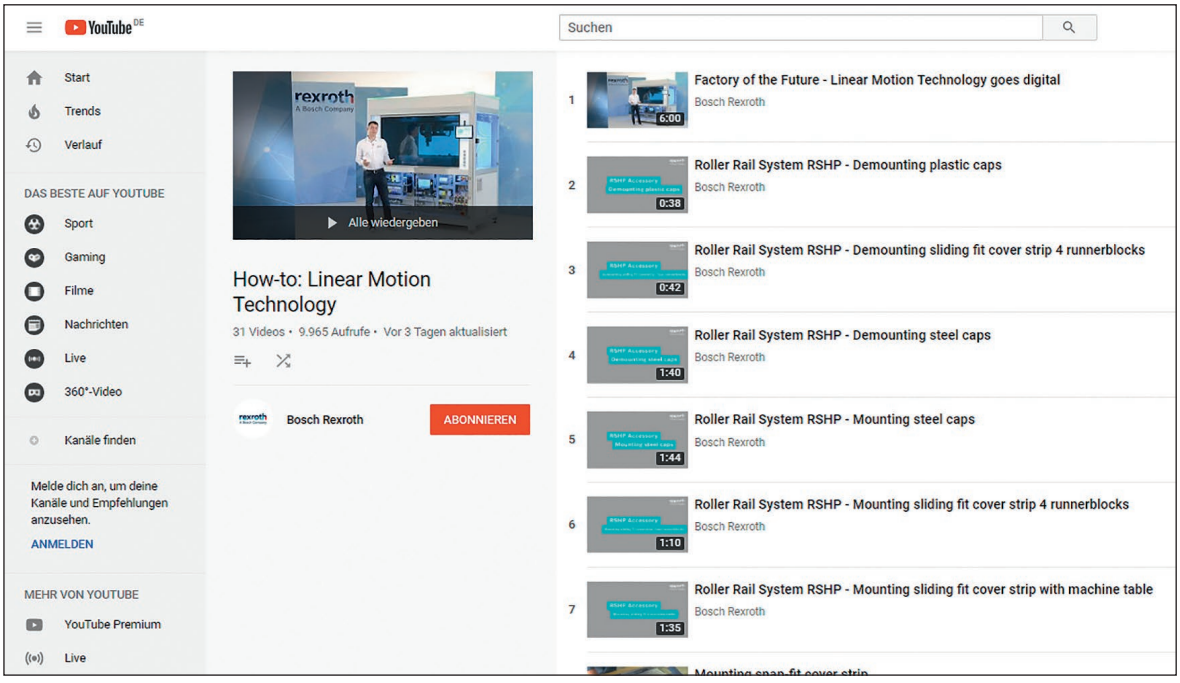

Service

https://www.boschrexroth.com/en/xc/products/product-groups/linear-motion-technology/service-linear-motion-technology

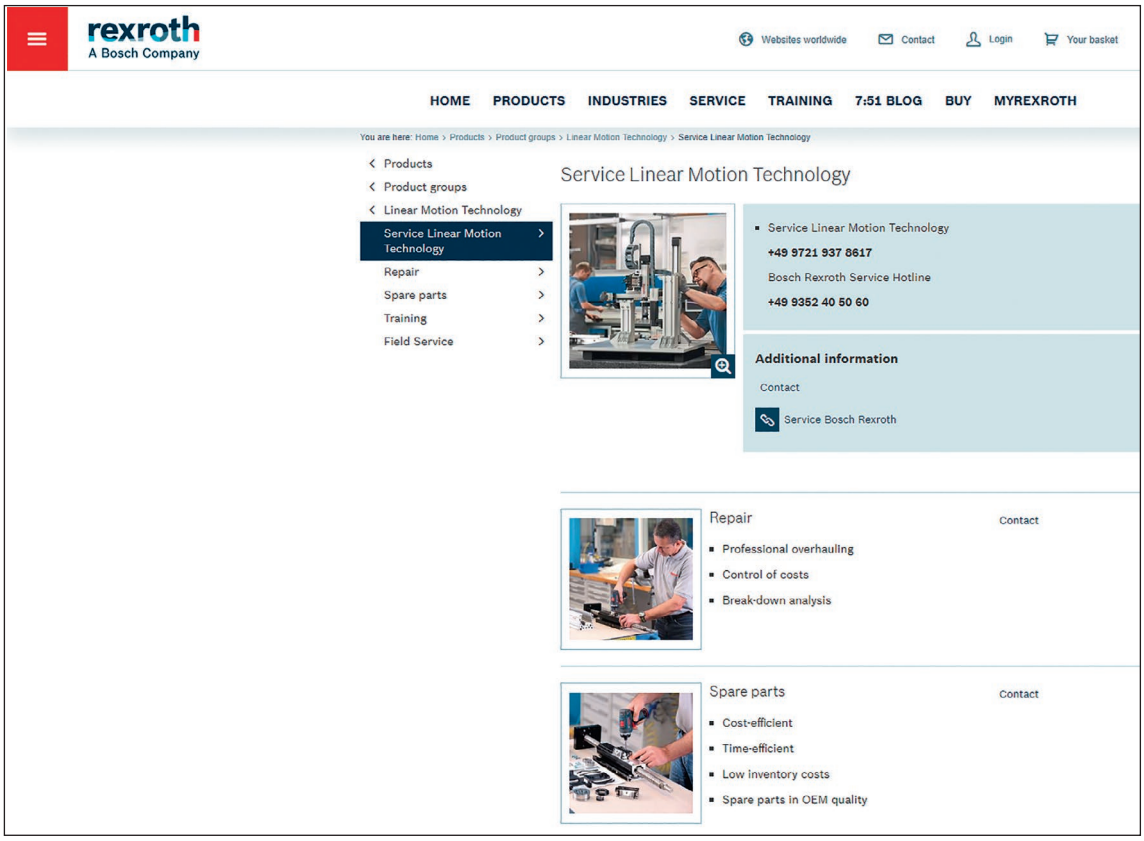

Bosch Rexroth AG
Ernst-Sachs-Straße 100
97424 Schweinfurt, Germany
Tel. +49 9721 937-0
Fax +49 9721 937-275
www.boschrexroth.com

Find your local contact person here:
www.boschrexroth.com/contact

R999001185/2021-04 replaces
R999001185/2020-10
© Bosch Rexroth AG 2021
Subject to changes!

The data specified above only serves to describe the product.
Since our products undergo continuous further development, no statement regarding any particular quality or suitability for any particular use can be derived from this information. The information does not release the user from making his/her own inspections and evaluations. It should be noted that our products are subject to a natural process of aging and wear and tear.